MANIGLIE PER PORTE INTERNE CON SISTEMA CLAQ®

INTERNAL DOORS HANDLES WITH CLAQ® SYSTEM

0

design Leo De Carlo

BRASS | **ZAMAK** | ALU | AISI 316 | AISI 304

MANIGLIA PER PORTE INTERNE – SUPPORTO ø52x10mm INTERNAL DOORS HANDLE – SUPPORT ø52x10mm

CARATTERISTICHE FEATURES	**FISSAGGIO** FIXING	**FINITURE** FINISHES								**OPZIONI** OPTIONS			
		1.000h	500h	500h	500h	500h	500h	500h		EN-179	REI-60	IP-65

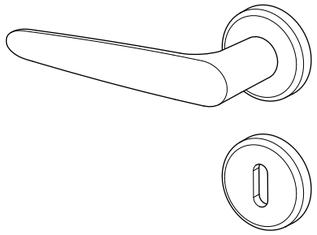

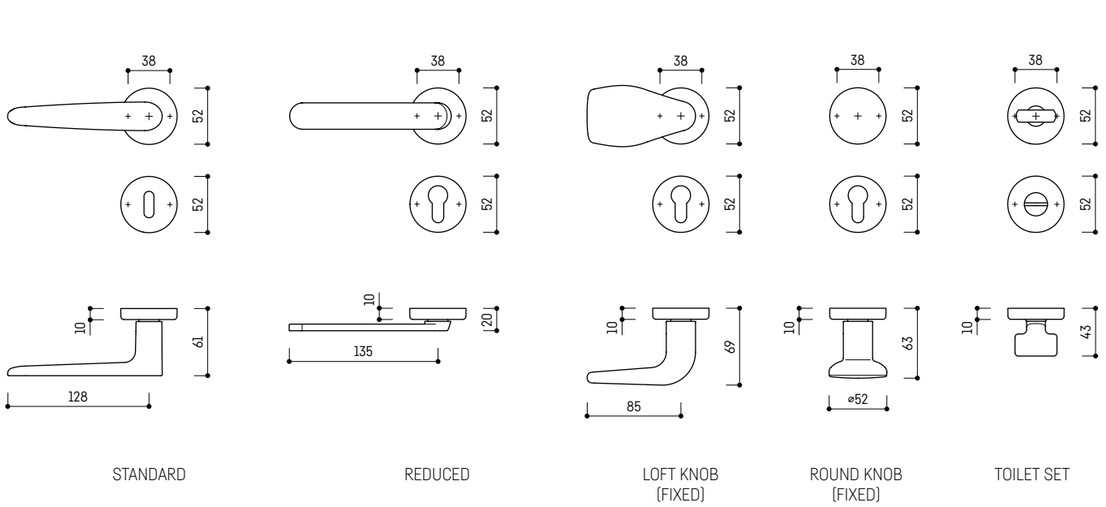

STANDARD | REDUCED | LOFT KNOB (FIXED) | ROUND KNOB (FIXED) | TOILET SET

VERSIONI DISPONIBILI AVAILABLE VERSIONS

CAPITOLATO SPECIFICATION

ULTRACYCLE®

ULTRACYCLE® tested for over **1.000.000** cycles - **CLASS 4**

NORMA DIN EN 1906 DIN EN 1906 NORM

4 | 7 | - | 0 | 0 | 4 | 0 | A

Per una descrizione dettagliata di tutte le specifiche tecniche presenti nel prodotto, da impiegare nei capitolati o nelle offerte pubbliche, fate riferimento alla sezione CAPITOLATI for a detailed description of all the technical informations contained in the product, to be used in the specifications or in public tenders, please refer to the SPECIFICATIONS section.

Descrizione Description: 0 design Leo De Carlo

Supporto Support: ZAMAK ø52x10mm

■	+	X								PLATINUM ABACO* 62	BLACK PEARL ABACO* 50	PLATINUM 03	BLACK PEARL 04	COPPER PEARL 5B	NOIR PEARL 08	COPPER SHINING 52	CRYSTAL SHINING 07	NATURAL GOLD 51	WHITE PEARL 02
8*	CLIAQ	3,9x25 3,9x50	38	Ø8	-	12	2	13502002	●	●	●	●	●	●	●	●	●	●
7*	CLIAQ	3,9x25 3,9x50	38	Ø8	-	12	2	13502003	●	●	●	●	●	●	●	●	●	●
8/135	CLIAQ	35-45	3,9x50	38	Ø8	-	12	2	13502004	●	●	●	●	●	●	●	●	●	●
8/135	CLIAQ	35-45	3,9x25 3,9x50	38	Ø8	-	12	2	13502005	●	●	●	●	●	●	●	●	●	●
7/135	CLIAQ	35-45	3,9x25 3,9x50	38	Ø8	-	12	2	13502006	●	●	●	●	●	●	●	●	●	●
8/135	CLIAQ	35-65	3,9x25	38	Ø8	-	12	2	13502007	●	●	●	●	●	●	●	●	●	●
7/135	CLIAQ	35-65	3,9x25	38	Ø8	-	12	2	13502008	●	●	●	●	●	●	●	●	●	●
8/135	CLIAQ	35-45	3,9x50	38	Ø8	-	12	2	13502009	●	●	●	●	●	●	●	●	●	●
8/135	CLIAQ	35-45	3,9x25 3,9x50	38	Ø8	-	12	2	13502010	●	●	●	●	●	●	●	●	●	●
7/135	CLIAQ	35-45	3,9x25 3,9x50	38	Ø8	-	12	2	13502011	●	●	●	●	●	●	●	●	●	●
8/135	CLIAQ	35-45	3,9x25	38	-	-	12	2	13502012	●	●	●	●	●	●	●	●	●	●
7/135	CLIAQ	35-45	3,9x25	38	-	-	12	2	13502013	●	●	●	●	●	●	●	●	●	●
8/135	CLIAQ	35-45	3,9x50	38	Ø8	-	12	2	13502014	●	●	●	●	●	●	●	●	●	●
8/160	CLIAQ	60-90	3,9x25 3,9x75 3,9x95	38	Ø8	-	12	2	13502019	●	●	●	●	●	●	●	●	●	●
8/135	CLIAQ	35-45	3,9x25 3,9x50	38	Ø8	-	12	2	13502015	●	●	●	●	●	●	●	●	●	●
8/160	CLIAQ	60-90	3,9x25 3,9x75 3,9x95	38	Ø8	-	12	2	13502020	●	●	●	●	●	●	●	●	●	●
7/135	CLIAQ	35-45	3,9x25 3,9x50	38	Ø8	-	12	2	13502016	●	●	●	●	●	●	●	●	●	●
7/160	CLIAQ	60-90	3,9x25 3,9x75 3,9x95	38	Ø8	-	12	2	13502021	●	●	●	●	●	●	●	●	●	●
8/135	CLIAQ	35-65	3,9x25	38	Ø8	-	12	2	13502017	●	●	●	●	●	●	●	●	●	●
8/160	CLIAQ	60-90	3,9x25	38	Ø8	-	12	2	13502022	●	●	●	●	●	●	●	●	●	●
7/135	CLIAQ	35-65	3,9x25	38	Ø8	-	12	2	13502018	●	●	●	●	●	●	●	●	●	●
7/160	CLIAQ	60-90	3,9x25	38	Ø8	-	12	2	13502023	●	●	●	●	●	●	●	●	●	●
(8)/135		35-45	3,9x50	38	Ø8	-	4	6	05112122	●	●	●	●	●	●	●	●	●	●

Descrizione_Description **O**_design Leo De Carlo

ZAMAK

Supporto_Support **ø52x10mm**

	■	+										PLATINUM ABACO* 62	BLACK PEARL ABACO* 50	PLATINUM 03	BLACK PEARL 04	COPPER PEARL 5B	NOIR PEARL 08	COPPER SHINING 52	CRYSTAL SHINING 07	NATURAL GOLD 51	WHITE PEARL 02
	(8)/135			35-45	3,9x25 3,9x50	38	Ø8	-	4	6	05112110	●	●	●	●	●	●	●	●	●	●
	(7)/135			35-45	3,9x25 3,9x50	38	Ø8	-	4	6	05112111	●	●	●	●	●	●	●	●	●	●
	(6)/135			35-45	3,9x25 3,9x50	38	Ø8	-	4	6	05112112	●	●	●	●	●	●	●	●	●	●
	(5)/135			35-45	3,9x25 3,9x50	38	Ø8	-	4	6	05112254	●	●	●	●	●	●	●	●	●	●
	(4)/135			35-45	3,9x25 3,9x50	38	Ø8	-	4	6	05112113	●	●	●	●	●	●	●	●	●	●
	8/135	GLAS		35-45	3,9x25 3,9x50	38	Ø8	-	12	1	19402005	●	●	●	●	●	●	●	●	●	●
	7/135	GLAS		35-45	3,9x25 3,9x50	38	Ø8	-	12	1	19402006	●	●	●	●	●	●	●	●	●	●
	8/155	GLAS		50-55	3,9x25 3,9x70	38	Ø8	-	12	1	19402007	●	●	●	●	●	●	●	●	●	●
	7/155	GLAS		50-55	3,9x25 3,9x70	38	Ø8	-	12	1	19402008	●	●	●	●	●	●	●	●	●	●
	8/165	GLAS		60-75	3,9x25 3,9x65 3,9x75 3,9x95	38	Ø8	-	12	1	19402008	●	●	●	●	●	●	●	●	●	●
	7/165	GLAS		60-75	3,9x25 3,9x65 3,9x75 3,9x95	38	Ø8	-	12	1	19402010	●	●	●	●	●	●	●	●	●	●
	8/175	GLAS		75-90	3,9x25 3,9x65 3,9x75 3,9x95	38	Ø8	-	12	1	19402011	●	●	●	●	●	●	●	●	●	●
	7/175	GLAS		75-90	3,9x25 3,9x65 3,9x75 3,9x95	38	Ø8	-	12	1	19402012	●	●	●	●	●	●	●	●	●	●

Descrizione_Description **1/2 ferro ancora**_1/2 anchor spindle

STEEL

Supporto_Support -

	■	+										MECHANISM 26
	8/60	GLAS CO	-	-	-	-	-	-	10	8	06727462	●
	8/70	GLAS CO	-	-	-	-	-	-	10	8	06727427	●
	8/80	GLAS CO	-	-	-	-	-	-	10	8	06727428	●
	8/90	GLAS CO	-	-	-	-	-	-	10	8	06727429	●
	8/100	GLAS CO	-	-	-	-	-	-	10	8	06727463	●
	7/60	GLAS CO	-	-	-	-	-	-	10	8	06727432	●
	7/70	GLAS CO	-	-	-	-	-	-	10	8	06727433	●
	7/80	GLAS CO	-	-	-	-	-	-	10	8	06727434	●
	7/90	GLAS CO	-	-	-	-	-	-	10	8	06727435	●
	7/100	GLAS CO	-	-	-	-	-	-	10	8	06727436	●

Descrizione_Description **LOFT/ROUND** pomolo fisso_fixed knob

ZAMAK

Supporto_Support **ø52x10mm**

	■	+										PLATINUM ABACO* 62	BLACK PEARL ABACO* 50	PLATINUM 03	BLACK PEARL 04	COPPER PEARL 5B	NOIR PEARL 08	COPPER SHINING 52	CRYSTAL SHINING 07	NATURAL GOLD 51	WHITE PEARL 02
	7* or 8*	GLAS		-	3,9x25 3,9x50	38	Ø8	-	12	1	17002001	●	●	●	●	●	●	●	●	●	●
	7* or 8*	GLAS		-	3,9x25 3,9x50	38	Ø8	-	12	1	19602001	●	●	●	●	●	●	●	●	●	●

Descrizione_Description **1/2 ferro per pomolo fisso**_1/2 fixed knob spindle

STEEL

Supporto_Support -

	■	+										MECHANISM 26
	7/90	GLAS CO	-	45-55	-	-	-	-	10	8	06727507	●
	7/100	GLAS CO	-	50-65	-	-	-	-	10	8	06727508	●
	7/110	GLAS CO	-	60-75	-	-	-	-	10	8	06727509	●
	7/120	GLAS CO	-	70-85	-	-	-	-	10	8	06727510	●
	7/130	GLAS CO	-	80-95	-	-	-	-	10	8	06727551	●
	7/140	GLAS CO	-	90-105	-	-	-	-	10	8	06727552	●
	8/90	GLAS CO	-	45-55	-	-	-	-	10	8	06727503	●
	8/100	GLAS CO	-	50-65	-	-	-	-	10	8	06727504	●
	8/110	GLAS CO	-	60-75	-	-	-	-	10	8	06727505	●
	8/120	GLAS CO	-	70-85	-	-	-	-	10	8	06727506	●
	8/130	GLAS CO	-	80-95	-	-	-	-	10	8	06727549	●
	8/140	GLAS CO	-	90-105	-	-	-	-	10	8	06727550	●

0

design Leo De Carlo

BRASS | **ZAMAK** | ALU | AISI 316 | AISI 304

MANIGLIA PER PORTE INTERNE – SUPPORTO ø45X8mm INTERNAL DOORS HANDLE – SUPPORT ø45X8mm

CARATTERISTICHE FEATURES	**FISSAGGIO** FIXING	**FINITURE** FINISHES								**OPZIONI** OPTIONS			
		1.000h	500h	500h	500h	500h	500h	500h					
		P	304	316			PVD			EN-179	REI-60	IP-65

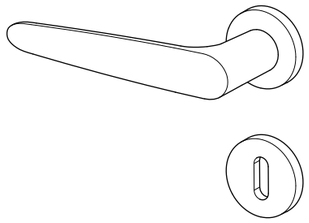

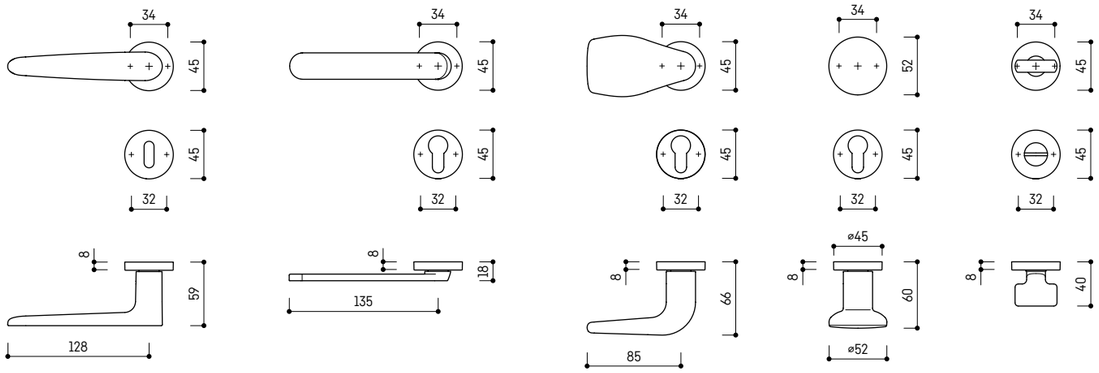

STANDARD | REDUCED | LOFT KNOB (FIXED) | ROUND KNOB (FIXED) | TOILET SET

VERSIONI DISPONIBILI AVAILABLE VERSIONS

CAPITOLATO SPECIFICATION

ULTRACYCLE®

ULTRACYCLE® tested for over **1.000.000** cycles - **CLASS 4**

NORMA DIN EN 1906 DIN EN 1906 NORM

4 | 7 | - | 0 | 0 | 4 | 0 | A

Per una descrizione dettagliata di tutte le specifiche tecniche presenti nel prodotto, da impiegare nei capitolati o nelle offerte pubbliche, fate riferimento alla sezione CAPITOLATI for a detailed description of all the technical informations contained in the product, to be used in the specifications or in public tenders, please refer to the SPECIFICATIONS section.

Descrizione Description: **0** design Leo De Carlo

ZAMAK

Supporto Support: **ø45X8mm**

■	+	x	x	PLATINUM ABACO* 62	BLACK PEARL ABACO* 50	PLATINUM 03	BLACK PEARL 04	COPPER PEARL 5B	NOIR PEARL 08	COPPER SHINING 52	CRYSTAL SHINING 07	NATURAL GOLD 51	WHITE PEARL 02
8*	GLAQ	-	3,9x25	34/32	-	-	12	2	13577001	-	-	●	●	●	●	●	●	●	●
7*	GLAQ	-	3,9x25	34/32	-	-	12	2	13577002	-	-	●	●	●	●	●	●	●	●
8/135	GLAQ	35-45	3,9x25	34	-	-	12	2	13577003	-	-	●	●	●	●	●	●	●	●
7/135	GLAQ	35-45	3,9x25	34	-	-	12	2	13577004	-	-	●	●	●	●	●	●	●	●
8/135	GLAQ	35-45	3,9x25	34/32	-	-	12	2	13577005	-	-	●	●	●	●	●	●	●	●
7/135	GLAQ	35-45	3,9x25	34/32	-	-	12	2	13577006	-	-	●	●	●	●	●	●	●	●
8/135	GLAQ	35-65	3,9x25	34/32	-	-	12	2	13577007	-	-	●	●	●	●	●	●	●	●
7/135	GLAQ	35-65	3,9x25	34/32	-	-	12	2	13577008	-	-	●	●	●	●	●	●	●	●
8/160	GLAQ	60-90	3,9x25	34/32	-	-	12	2	13577009	-	-	●	●	●	●	●	●	●	●
7/160	GLAQ	60-90	3,9x25	34/32	-	-	12	2	13577010	-	-	●	●	●	●	●	●	●	●
(8)/135	-	35-45	3,9x25	34/32	-	-	4	6	05112197	-	-	●	●	●	●	●	●	●	●
(7)/135	-	35-45	3,9x25	34/32	-	-	4	6	05112198	-	-	●	●	●	●	●	●	●	●
(6)/135	-	35-45	3,9x25	34/32	-	-	4	6	05112199	-	-	●	●	●	●	●	●	●	●
(5)/135	-	35-45	3,9x25	34/32	-	-	4	6	05112257	-	-	●	●	●	●	●	●	●	●
(4)/135	-	35-45	3,9x25	34/32	-	-	4	6	05112200	-	-	●	●	●	●	●	●	●	●
8/135	GLAQ	35-45	3,9x25	34	-	-	12	1	19477001	-	-	●	●	●	●	●	●	●	●
7/135	GLAQ	35-45	3,9x25	34	-	-	12	1	19477002	-	-	●	●	●	●	●	●	●	●
8/155	GLAQ	50-55	3,9x25	34	-	-	12	1	19477003	-	-	●	●	●	●	●	●	●	●
7/155	GLAQ	50-55	3,9x25	34	-	-	12	1	19497004	-	-	●	●	●	●	●	●	●	●
8/165	GLAQ	60-75	3,9x25	34	-	-	12	1	19477005	-	-	●	●	●	●	●	●	●	●
7/165	GLAQ	60-75	3,9x25	34	-	-	12	1	19477006	-	-	●	●	●	●	●	●	●	●
8/175	GLAQ	75-90	3,9x25	34	-	-	12	1	19477007	-	-	●	●	●	●	●	●	●	●
7/175	GLAQ	75-90	3,9x25	34	-	-	12	1	19477008	-	-	●	●	●	●	●	●	●	●

Descrizione_Description **1/2 ferro ancora**_1/2 anchor spindle

STEEL

Supporto_Support -

												MECHANISM 26
8/60	CLAQ CC	-	-	-	-	-	-	10	8	06727462		●
8/70	CLAQ CC	-	-	-	-	-	-	10	8	06727427		●
8/80	CLAQ CC	-	-	-	-	-	-	10	8	06727428		●
8/90	CLAQ CC	-	-	-	-	-	-	10	8	06727429		●
8/100	CLAQ CC	-	-	-	-	-	-	10	8	06727463		●
7/60	CLAQ CC	-	-	-	-	-	-	10	8	06727432		●
7/70	CLAQ CC	-	-	-	-	-	-	10	8	06727433		●
7/80	CLAQ CC	-	-	-	-	-	-	10	8	06727434		●
7/90	CLAQ CC	-	-	-	-	-	-	10	8	06727435		●
7/100	CLAQ CC	-	-	-	-	-	-	10	8	06727436		●

Descrizione_Description **LOFT/ROUND** pomolo fisso_fixed knob

ZAMAK

Supporto_Support **ø45X8mm**

											PLATINUM ABACO* 62	BLACK PEARL ABACO* 50	PLATINUM PVD 03	BLACK PEARL PVD 04	COPPER PEARL PVD 5B	NOIR PEARL PVD 08	COPPER SHINING PVD 52	CRYSTAL SHINING PVD 07	NATURAL GOLD PVD 51	WHITE PEARL PVD 02
7* or 8*	CLAQ	-	-	3,9x25	34	-	-	12	1	17077001	-	-	●	●	●	●	●	●	●	●
7* or 8*	CLAQ	-	-	3,9x25	34	-	-	12	1	19677001	-	-	●	●	●	●	●	●	●	●

Descrizione_Description **1/2 ferro per pomolo fisso**_1/2 fixed knob spindle

STEEL

Supporto_Support -

											MECHANISM 26
7/90	CLAQ CC	-	45-55	-	-	-	-	10	8	06727507	●
7/100	CLAQ CC	-	50-65	-	-	-	-	10	8	06727508	●
7/110	CLAQ CC	-	60-75	-	-	-	-	10	8	06727509	●
7/120	CLAQ CC	-	70-85	-	-	-	-	10	8	06727510	●
7/130	CLAQ CC	-	80-95	-	-	-	-	10	8	06727551	●
7/140	CLAQ CC	-	90-105	-	-	-	-	10	8	06727552	●
8/90	CLAQ CC	-	45-55	-	-	-	-	10	8	06727503	●
8/100	CLAQ CC	-	50-65	-	-	-	-	10	8	06727504	●
8/110	CLAQ CC	-	60-75	-	-	-	-	10	8	06727505	●
8/120	CLAQ CC	-	70-85	-	-	-	-	10	8	06727506	●
8/130	CLAQ CC	-	80-95	-	-	-	-	10	8	06727549	●
8/140	CLAQ CC	-	90-105	-	-	-	-	10	8	06727550	●

0

design Leo De Carlo

CE

BRASS **ZAMAK** ALU AISI 316 AISI 304

MANIGLIA PER PORTE INTERNE – SUPPORTO MINIMAL ø25x2mm_INTERNAL DOORS HANDLE – SUPPORT MINIMAL ø25x2mm

CARATTERISTICHE_FEATURES	**FISSAGGIO**_FIXING	**FINITURE**_FINISHES										**OPZIONI**_OPTIONS			
		1.000h	304 500h	316 500h	500h	500h	PVD 500h	500h							
CLAQ													EN-179	REI-60	IP-65

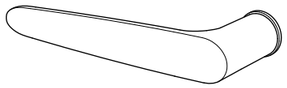

STANDARD TOILET SET

VERSIONI DISPONIBILI_AVAILABLE VERSIONS

CAPITOLATO_SPECIFICATION

ULTRACYCLE®

ULTRACYCLE® tested for over **1.000.000** cycles - **CLASS 4**

NORMA DIN EN 1906_DIN EN 1906 NORM

4 | 7 | - | 0 | 0 | 4 | 0 | A

Per una descrizione dettagliata di tutte le specifiche tecniche presenti nel prodotto, da impiegare nei capitolati o nelle offerte pubbliche, fate riferimento alla sezione CAPITOLATI_for a detailed description of all the technical informations contained in the product, to be used in the specifications or in public tenders, please refer to the SPECIFICATIONS section.

Descrizione_Description | **O**_design Leo De Carlo

ZAMAK

Supporto_Support | **MINIMAL ø25x2mm**

	■	+										PLATINUM ABACO* 62	BLACK PEARL ABACO* 50	PLATINUM 03	BLACK PEARL 04	COPPER PEARL 5B	NOIR PEARL 08	COPPER SHINING 52	CRYSTAL SHINING 07	NATURAL GOLD 51	WHITE PEARL 02
	8/135	CLAQ		35-45	-	-	ø20	-	12	2	13546001	-	-	●	●	●	●	●	●	●	●
	7/135	CLAQ		35-45	-	-	ø20	-	12	2	13546002	-	-	●	●	●	●	●	●	●	●
	-	CLAQ		-	-	-	ø20	-	24	10	06548093	-	-	●	●	●	●	●	●	●	●
	-	-		-	-	-	ø20	-	24	10	06525146	-	-	●	●	●	●	●	●	●	●
	-	-		-	-	-	-	-	24	10	06525145	-	-	●	●	●	●	●	●	●	●
	(8)/135	-		35-45	-	-	ø20	-	4	6	05112233	-	-	●	●	●	●	●	●	●	●
	(7)/135	-		35-45	-	-	ø20	-	4	6	05112234	-	-	●	●	●	●	●	●	●	●
	(6)/135	-		35-45	-	-	ø20	-	4	6	05112235	-	-	●	●	●	●	●	●	●	●
	(5)/135	-		35-45	-	-	ø20	-	4	6	05112259	-	-	●	●	●	●	●	●	●	●
	(4)/135	-		35-45	-	-	ø20	-	4	6	05112260	-	-	●	●	●	●	●	●	●	●

O

design Leo De Carlo

CE

BRASS | **ZAMAK** | ALU | AISI 316 | AISI 304

MANIGLIA PER PORTE INTERNE – SUPPORTO EASYPIN ø55x2mm_INTERNAL DOORS HANDLE – SUPPORT EASYPIN ø55x2mm

CARATTERISTICHE_FEATURES	**FISSAGGIO**_FIXING	**FINITURE**_FINISHES	**OPZIONI**_OPTIONS
		1.000h · 500h · 500h · 500h · 500h · PVD 500h · 500h	EN-179 · REI-60 · IP-65

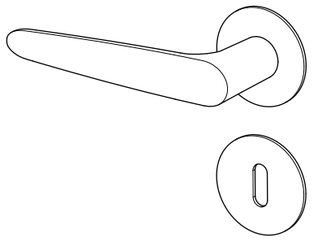

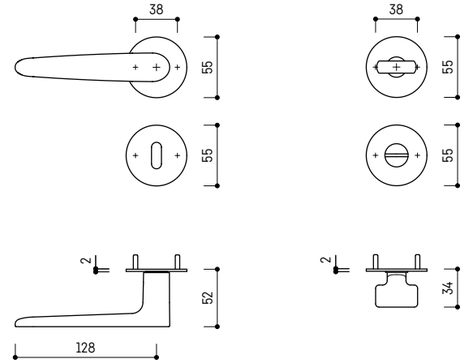

STANDARD | TOILET SET

VERSIONI DISPONIBILI_AVAILABLE VERSIONS

CAPITOLATO_SPECIFICATION

ULTRACYCLE®

ULTRACYCLE® tested for over **1.000.000** cycles - **CLASS 4**

NORMA DIN EN 1906_DIN EN 1906 NORM

4 | 7 | - | 0 | 0 | 4 | 0 | A

Per una descrizione dettagliata di tutte le specifiche tecniche presenti nel prodotto, da impiegare nei capitolati o nelle offerte pubbliche, fate riferimento alla sezione CAPITOLATI_for a detailed description of all the technical informations contained in the product, to be used in the specifications or in public tenders, please refer to the SPECIFICATIONS section.

Descrizione_Description | **O**_design Leo De Carlo

ZAMAK

Supporto_Support | **EASYPIN ø55x2mm**

	■	+										PLATINUM ABACO* 62	BLACK PEARL ABACO* 50	PLATINUM 03	BLACK PEARL 04	COPPER PEARL 5B	NOIR PEARL 08	COPPER SHINING 52	CRYSTAL SHINING 07	NATURAL GOLD 51	WHITE PEARL 02
	8/135	CLAQ		35-45	-	38	Ø7	-	12	2	13559001	-	-	●	●	●	●	●	●	●	●
	7/135	CLAQ		35-45	-	38	Ø7	-	12	2	13559002	-	-	●	●	●	●	●	●	●	●
	-	CLAQ		-	-	38	Ø7	-	24	10	06548077	-	-	●	●	●	●	●	●	●	●
	-	-		-	-	38	Ø7	-	24	10	06525121	-	-	●	●	●	●	●	●	●	●
	-	-		-	-	38	Ø7	-	24	10	06525120	-	-	●	●	●	●	●	●	●	●
	(8)/135	-		35-45	-	38	Ø7	-	4	6	05112251	-	-	●	●	●	●	●	●	●	●
	(7)/135	-		35-45	-	38	Ø7	-	4	6	05112261	-	-	●	●	●	●	●	●	●	●
	(6)/135	-		35-45	-	38	Ø7	-	4	6	05112262	-	-	●	●	●	●	●	●	●	●
	(5)/135	-		35-45	-	38	Ø7	-	4	6	05112263	-	-	●	●	●	●	●	●	●	●
	(4)/135	-		35-45	-	38	Ø7	-	4	6	05112264	-	-	●	●	●	●	●	●	●	●

0

design Leo De Carlo

CE

BRASS | **ZAMAK** | ALU | AISI 316 | AISI 304

MANIGLIA PER PORTE INTERNE – SUPPORTO 40x235x9mm_INTERNAL DOORS HANDLE – SUPPORT 40x235x9mm

CARATTERISTICHE_FEATURES	**FISSAGGIO**_FIXING	**FINITURE**_FINISHES	**OPZIONI**_OPTIONS

												1.000h	500h	500h	500h	500h	PVD 500h	500h		EN-179	REI-60	IP-65
	CLAQ												304	316								

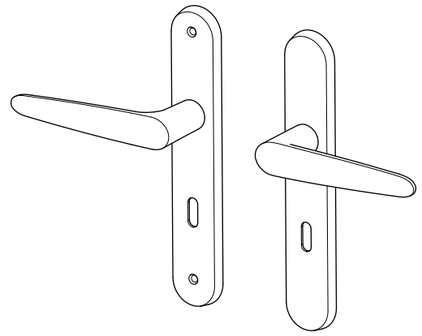

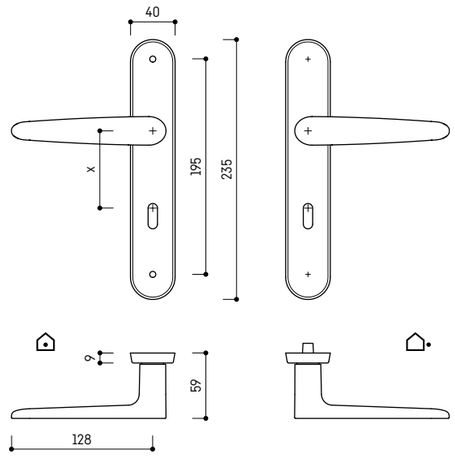

VERSIONI DISPONIBILI_AVAILABLE VERSIONS

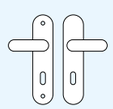
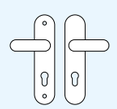
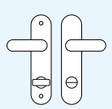

CAPITOLATO_SPECIFICATION

ULTRACYCLE®

ULTRACYCLE® tested for over **1.000.000** cycles - **CLASS 4**

NORMA DIN EN 1906_DIN EN 1906 NORM

4 | 7 | - | 0 | 0 | 4 | 0 | A

Per una descrizione dettagliata di tutte le specifiche tecniche presenti nel prodotto, da impiegare nei capitolati o nelle offerte pubbliche, fate riferimento alla sezione CAPITOLATI_for a detailed description of all the technical informations contained in the product, to be used in the specifications or in public tenders, please refer to the SPECIFICATIONS section.

Descrizione_Description | **O**_design Leo De Carlo

ZAMAK

Supporto_Support | **40x235x9mm**

												PLATINUM ABACO® 62	BLACK PEARL ABACO® 50	PLATINUM 03	BLACK PEARL 04	COPPER PEARL 5B	NOIR PEARL 08	COPPER SHINING 52	CRYSTAL SHINING 07	NATURAL GOLD 51	WHITE PEARL 02
	■	+																			
	8/135	CLAQ		35-55	M4x75 SEC	195	Ø10	72	12	2	13501001	-	-	●	●	●	●	-	●	●	●
	7/135	CLAQ		35-55	M4x75 SEC	195	Ø10	70	12	2	13501002	-	-	●	●	●	●	-	●	●	●
	8/135	CLAQ		35-55	M4x75 SEC	195	Ø10	72	12	2	13501003	-	-	●	●	●	●	-	●	●	●
	7/135	CLAQ		35-55	M4x75 SEC	195	Ø10	70	12	2	13501004	-	-	●	●	●	●	-	●	●	●
	8(8)/135	CLAQ		35-55	M4x75 SEC	195	Ø10	78	12	2	13501005	-	-	●	●	●	●	-	●	●	●
	7(6)/135	CLAQ		35-55	M4x75 SEC	195	Ø10	70	12	2	13501006	-	-	●	●	●	●	-	●	●	●

0

design Leo De Carlo

CE

BRASS | ZAMAK | **ALU** | AISI 316 | AISI 304

MANIGLIA PER PORTE INTERNE – SUPPORTO ø52x10mm_INTERNAL DOORS HANDLE – SUPPORT ø52x10mm

CARATTERISTICHE_FEATURES					**FISSAGGIO**_FIXING						**FINITURE**_FINISHES							**OPZIONI**_OPTIONS			
	CLAQ	R									1.000h	500h	500h	500h	500h	500h	500h		EN-179	REI-60	IP-65

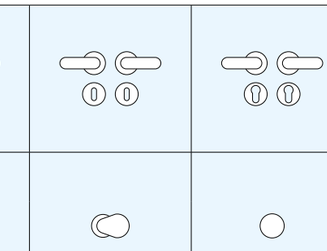

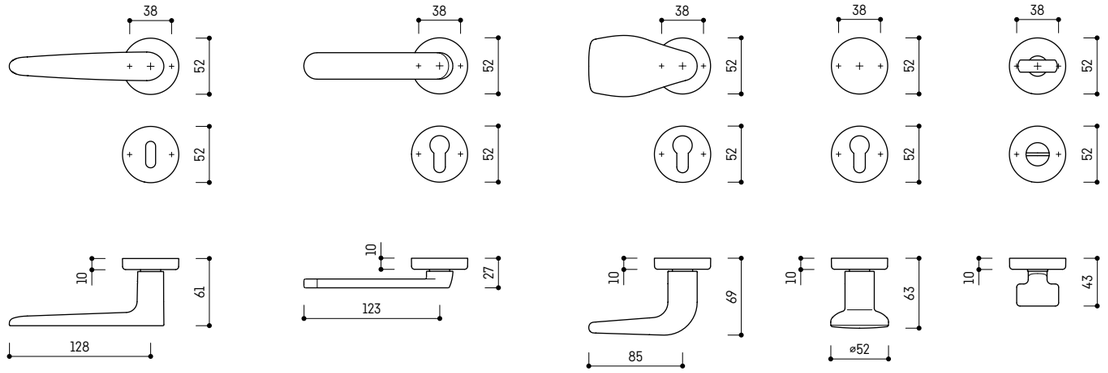

STANDARD | REDUCED | LOFT KNOB (FIXED) | ROUND KNOB (FIXED) | TOILET SET

VERSIONI DISPONIBILI_AVAILABLE VERSIONS

CAPITOLATO_SPECIFICATION

ULTRACYCLE®

ULTRACYCLE® tested for over **1.000.000** cycles - **CLASS 4**

NORMA DIN EN 1906_DIN EN 1906 NORM

4 | 7 | - | 0 | 0 | 4 | 0 | A

Per una descrizione dettagliata di tutte le specifiche tecniche presenti nel prodotto, da impiegare nei capitolati o nelle offerte pubbliche, fate riferimento alla sezione CAPITOLATI_for a detailed description of all the technical informations contained in the product, to be used in the specifications or in public tenders, please refer to the SPECIFICATIONS section.

Descrizione_Description O_design Leo De Carlo

ALU

Supporto_Support ø52x10mm

| | | |

Descrizione_Description O_design Leo De Carlo

ALU

Supporto_Support ø52x10mm

■	+		x	x							F1 97	F9 4B	ENOX 77	BLACK RAL 9005 33	WHITE SIGNAL RAL 9016 22	PURE WHITE RAL 9010 67	WHITE BIOV® 88	NOIR BIOV® 89	ANTHRACITE RAL 7016 78	LIGHT GREY RAL 7035 82	CLAY BROWN RAL 8003 80	IVORY RAL 1015 81	DARK BROWN RAL 8707 96
7/135			35-45	3,9x25 3,9x50	38	Ø8	-	12	1	17902006	●	●	●	●	●	●	●	●	●	●	-	●	●
8/155			50-55	3,9x25 3,9x70	38	Ø8	-	12	1	17902007	●	●	●	●	●	●	●	●	●	●	-	●	●
7/155			50-55	3,9x25 3,9x70	38	Ø8	-	12	1	17902008	●	●	●	●	●	●	●	●	●	●	-	●	●
8/165			60-75	3,9x25 3,9x65 3,9x75 3,9x95	38	Ø8	-	12	1	17902009	●	●	●	●	●	●	●	●	●	●	-	●	●
7/165			60-75	3,9x25 3,9x65 3,9x75 3,9x95	38	Ø8	-	12	1	17902010	●	●	●	●	●	●	●	●	●	●	-	●	●
8/175			75-90	3,9x25 3,9x65 3,9x75 3,9x95	38	Ø8	-	12	1	17902011	●	●	●	●	●	●	●	●	●	●	-	●	●
7/175			75-90	3,9x25 3,9x65 3,9x75 3,9x95	38	Ø8	-	12	1	17902012	●	●	●	●	●	●	●	●	●	●	-	●	●

Descrizione_Description 1/2 ferro ancora_1/2 anchor spindle

STEEL

Supporto_Support -

■	+		x	x							MECHANISM 26
8/60		-	-	-	-	-	-	10	8	06727462	●
8/70		-	-	-	-	-	-	10	8	06727427	●
8/80		-	-	-	-	-	-	10	8	06727428	●
8/90		-	-	-	-	-	-	10	8	06727429	●
8/100		-	-	-	-	-	-	10	8	06727463	●
7/60		-	-	-	-	-	-	10	8	06727432	●
7/70		-	-	-	-	-	-	10	8	06727433	●
7/80		-	-	-	-	-	-	10	8	06727434	●
7/90		-	-	-	-	-	-	10	8	06727435	●
7/100		-	-	-	-	-	-	10	8	06727436	●

Descrizione_Description LOFT/ROUND pomolo fisso_fixed knob

ALU

Supporto_Support ø52x10mm

■	+		x	x							F1 97	F9 4B	ENOX 77	BLACK RAL 9005 33	WHITE SIGNAL RAL 9016 22	PURE WHITE RAL 9010 67	WHITE BIOV® 88	NOIR BIOV® 89	ANTHRACITE RAL 7016 78	LIGHT GREY RAL 7035 82	CLAY BROWN RAL 8003 80	IVORY RAL 1015 81	DARK BROWN RAL 8707 96
7" or 8"			-	3,9x25 3,9x50	38	Ø8	-	12	1	19502001	●	●	●	●	●	●	●	●	●	●	-	●	●
7" or 8"			-	3,9x25 3,9x50	38	Ø8	-	12	1	19702001	●	●	●	●	●	●	●	●	●	●	-	●	●

Descrizione_Description 1/2 ferro per pomolo fisso_1/2 fixed knob spindle

STEEL

Supporto_Support -

■	+		x	x							MECHANISM 26
7/90		-	45-55	-	-	-	-	10	8	06727507	●
7/100		-	50-65	-	-	-	-	10	8	06727508	●
7/110		-	60-75	-	-	-	-	10	8	06727509	●
7/120		-	70-85	-	-	-	-	10	8	06727510	●
7/130		-	80-95	-	-	-	-	10	8	06727551	●
7/140		-	90-105	-	-	-	-	10	8	06727552	●
8/90		-	45-55	-	-	-	-	10	8	06727503	●
8/100		-	50-65	-	-	-	-	10	8	06727504	●
8/110		-	60-75	-	-	-	-	10	8	06727505	●
8/120		-	70-85	-	-	-	-	10	8	06727506	●
8/130		-	80-95	-	-	-	-	10	8	06727549	●
8/140		-	90-105	-	-	-	-	10	8	06727550	●

0

design Leo De Carlo

CE

BRASS · ZAMAK · **ALU** · AISI 316 · AISI 304

MANIGLIA PER PORTE INTERNE – SUPPORTO ø45x8mm _INTERNAL DOORS HANDLE – SUPPORT ø45x8mm

CARATTERISTICHE_FEATURES	**FISSAGGIO**_FIXING	**FINITURE**_FINISHES	**OPZIONI**_OPTIONS
		1.000h · 500h · 500h · 500h · 500h · 500h · 500h	EN-179 · REI-60 · IP-65

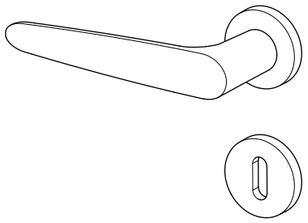

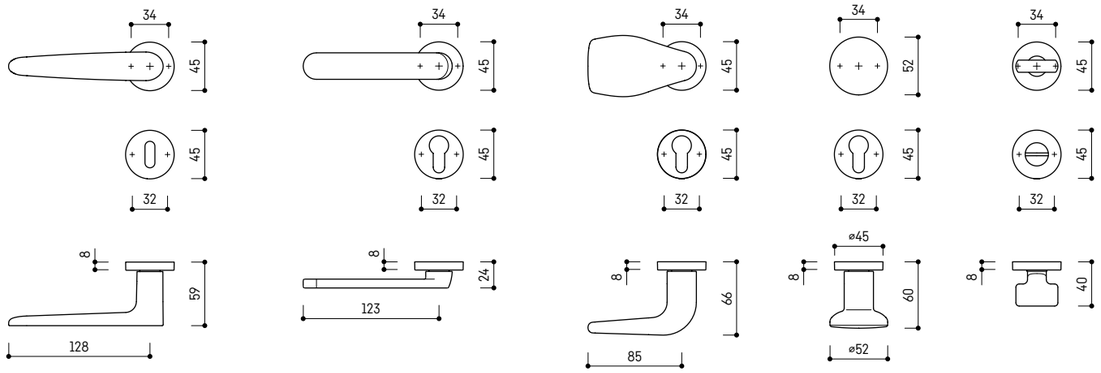

STANDARD · REDUCED · LOFT KNOB (FIXED) · ROUND KNOB (FIXED) · TOILET SET

VERSIONI DISPONIBILI_AVAILABLE VERSIONS

CAPITOLATO_SPECIFICATION

ULTRACYCLE®

ULTRACYCLE® tested for over **1.000.000** cycles - **CLASS 4**

NORMA DIN EN 1906 _DIN EN 1906 NORM

4 | 7 | - | 0 | 0 | 4 | 0 | A

Per una descrizione dettagliata di tutte le specifiche tecniche presenti nel prodotto, da impiegare nei capitolati o nelle offerte pubbliche, fate riferimento alla sezione CAPITOLATI _for a detailed description of all the technical informations contained in the product, to be used in the specifications or in public tenders, please refer to the SPECIFICATIONS section.

Descrizione_Description: O_design Leo De Carlo

Supporto_Support: ALU

Supporto_Support: ø45x8mm

■	+	x	x	97 F1	4B F9	77 ENOX	33 BLACK RAL 9005	22 WHITE SIGNAL RAL 9016	67 PURE WHITE RAL 9010	88 WHITE BIOV*	89 NOIR BIOV*	78 ANTHRACITE RAL 7016	82 LIGHT GREY RAL 7035	80 CLAY BROWN RAL 8003	81 IVORY RAL 1015	96 DARK BROWN RAL 8017	
8*	CLAQ	-	3,9x25	34/32	-	-	12	2	16277001	●	●	●	●	●	●	●	●	●	●	-	●	●	
7*	CLAQ	-	3,9x25	34/32	-	-	12	2	16277002	●	●	●	●	●	●	●	●	●	●	-	●	●	
8/135	CLAQ	35-45	3,9x25	34	-	-	12	2	16277003	●	●	●	●	●	●	●	●	●	●	-	●	●	
7/135	CLAQ	35-45	3,9x25	34	-	-	12	2	16277004	●	●	●	●	●	●	●	●	●	●	-	●	●	
8/135	CLAQ	35-45	3,9x25	34/32	-	-	12	2	16277005	●	●	●	●	●	●	●	●	●	●	-	●	●	
7/135	CLAQ	35-45	3,9x25	34/32	-	-	12	2	16277006	●	●	●	●	●	●	●	●	●	●	-	●	●	
8/135	CLAQ	35-65	3,9x25	34/32	-	-	12	2	16277007	●	●	●	●	●	●	●	●	●	●	-	●	●	
7/135	CLAQ	35-65	3,9x25	34/32	-	-	12	2	16277008	●	●	●	●	●	●	●	●	●	●	-	●	●	
8/160	CLAQ	60-90	3,9x25	34/32	-	-	12	2	16277009	●	●	●	●	●	●	●	●	●	●	-	●	●	
7/160	CLAQ	60-90	3,9x25	34/32	-	-	12	2	16277010	●	●	●	●	●	●	●	●	●	●	-	●	●	
(8)/135	-	35-45	3,9x25	34/32	-	-	4	6	05112185	●	●	●	●	●	●	●	●	●	●	-	●	●	
(7)/135	-	35-45	3,9x25	34/32	-	-	4	6	05112186	●	●	●	●	●	●	●	●	●	●	-	●	●	
(6)/135	-	35-45	3,9x25	34/32	-	-	4	6	05112187	●	●	●	●	●	●	●	●	●	●	-	●	●	
(5)/135	-	35-45	3,9x25	34/32	-	-	4	6	05112258	●	●	●	●	●	●	●	●	●	●	-	●	●	
(4)/135	-	35-45	3,9x25	34/32	-	-	4	6	05112188	●	●	●	●	●	●	●	●	●	●	-	●	●	
8/135	CLAQ	35-45	3,9x25	34	-	-	12	1	17977001	●	●	●	●	●	●	●	●	●	●	-	●	●	
7/135	CLAQ	35-45	3,9x25	34	-	-	12	1	17977002	●	●	●	●	●	●	●	●	●	●	-	●	●	
8/155	CLAQ	50-55	3,9x25	34	-	-	12	1	17977003	●	●	●	●	●	●	●	●	●	●	-	●	●	
7/155	CLAQ	50-55	3,9x25	34	-	-	12	1	17977004	●	●	●	●	●	●	●	●	●	●	-	●	●	
8/165	CLAQ	60-75	3,9x25	34	-	-	12	1	17977005	●	●	●	●	●	●	●	●	●	●	-	●	●	
7/165	CLAQ	60-75	3,9x25	34	-	-	12	1	17977006	●	●	●	●	●	●	●	●	●	●	-	●	●	
8/175	CLAQ	75-90	3,9x25	34	-	-	12	1	17977007	●	●	●	●	●	●	●	●	●	●	-	●	●	
7/175	CLAQ	75-90	3,9x25	34	-	-	12	1	17977008	●	●	●	●	●	●	●	●	●	●	-	●	●	

Descrizione_Description **1/2 ferro ancora**_1/2 anchor spindle

STEEL

Supporto_Support -

												MECHANISM 26
8/60	CLAC	-	-	-	-	-	-	10	8	06727462		●
8/70	CLAC	-	-	-	-	-	-	10	8	06727427		●
8/80	CLAC	-	-	-	-	-	-	10	8	06727428		●
8/90	CLAC	-	-	-	-	-	-	10	8	06727429		●
8/100	CLAC	-	-	-	-	-	-	10	8	06727463		●
7/60	CLAC	-	-	-	-	-	-	10	8	06727432		●
7/70	CLAC	-	-	-	-	-	-	10	8	06727433		●
7/80	CLAC	-	-	-	-	-	-	10	8	06727434		●
7/90	CLAC	-	-	-	-	-	-	10	8	06727435		●
7/100	CLAC	-	-	-	-	-	-	10	8	06727436		●

Descrizione_Description **LOFT/ROUND** pomolo fisso_fixed knob

ALU

Supporto_Support **ø45x8mm**

												F1 97	F9 4B	ENOX 77	BLACK RAL 9005 33	WHITE SIGNAL RAL 9016 22	PURE WHITE RAL 9010 67	WHITE BIO V* 88	NOIR BIO V* 89	ANTHRACITE RAL 7024 78	LIGHT GREY RAL 7035 82	CLAY BROWN RAL 8003 80	IVORY RAL 1015 81	DARK BROWN RAL 8017 96
7* or 8*	CLAC	-	-	3,9x25	34	-	-	12	1	19577001		●	●	●	●	●	●	●	●	●	●	-	●	●
7* or 8*	CLAC	-	-	3,9x25	34	-	-	12	1	19777001		●	●	●	●	●	●	●	●	●	●	-	●	●

Descrizione_Description **1/2 ferro per pomolo fisso**_1/2 fixed knob spindle

STEEL

Supporto_Support -

											MECHANISM 26
7/90	CLAC	-	45-55	-	-	-	-	10	8	06727507	●
7/100	CLAC	-	50-65	-	-	-	-	10	8	06727508	●
7/110	CLAC	-	60-75	-	-	-	-	10	8	06727509	●
7/120	CLAC	-	70-85	-	-	-	-	10	8	06727510	●
7/130	CLAC	-	80-95	-	-	-	-	10	8	06727551	●
7/140	CLAC	-	90-105	-	-	-	-	10	8	06727552	●
8/90	CLAC	-	45-55	-	-	-	-	10	8	06727503	●
8/100	CLAC	-	50-65	-	-	-	-	10	8	06727504	●
8/110	CLAC	-	60-75	-	-	-	-	10	8	06727505	●
8/120	CLAC	-	70-85	-	-	-	-	10	8	06727506	●
8/130	CLAC	-	80-95	-	-	-	-	10	8	06727549	●
8/140	CLAC	-	90-105	-	-	-	-	10	8	06727550	●

0

design Leo De Carlo

CE

BRASS ZAMAK **ALU** AISI 316 AISI 304

MANIGLIA PER PORTE INTERNE – SUPPORTO MINIMAL ø25x2mm_INTERNAL DOORS HANDLE – SUPPORT MINIMAL ø25x2mm

CARATTERISTICHE_FEATURES					**FISSAGGIO**_FIXING						**FINITURE**_FINISHES							**OPZIONI**_OPTIONS			
	CLAO	R									1.000h	304 500h	316 500h	500h	500h	PVD 500h	500h		EN-179	REI-60	IP-65

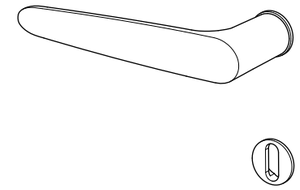

STANDARD TOILET SET

VERSIONI DISPONIBILI_AVAILABLE VERSIONS

CAPITOLATO_SPECIFICATION

ULTRACYCLE®

ULTRACYCLE® tested for over **1.000.000** cycles - **CLASS 4**

NORMA DIN EN 1906_DIN EN 1906 NORM

4 | 7 | - | 0 | 0 | 4 | 0 | A

Per una descrizione dettagliata di tutte le specifiche tecniche presenti nel prodotto, da impiegare nei capitolati o nelle offerte pubbliche, fate riferimento alla sezione CAPITOLATI_for a detailed description of all the technical informations contained in the product, to be used in the specifications or in public tenders, please refer to the SPECIFICATIONS section.

Descrizione_Description | O_design Leo De Carlo

ALU

Supporto_Support | ø25x2mm

													FI 97	FP 4B	ENOX 77	BLACK RAL 9005 33	WHITE SIGNAL RAL 7035 22	PURE WHITE RAL 9010 67	WHITE BIOV* 88	NOIR BIOV* 89	ANTHRACITE RAL 7024 78	LIGHT GREY RAL 7035 82	CLAY BROWN RAL 8003 80	IVORY RAL 1015 81	DARK BROWN RAL 8077 96
	8/135	CLAQ		35-45	-	-	ø20	-	12	2	16246001	●	●	●	●	●	●	●	●	●	●	-	●	●
	7/135	CLAQ		35-45	-	-	ø20	-	12	2	16246002	●	●	●	●	●	●	●	●	●	●	-	●	●
	-	CLAQ		-	-	-	ø20	-	24	10	06548093	●	●	●	●	●	●	●	●	●	●	-	●	●
	-	-		-	-	-	ø20	-	24	10	06525146	●	●	●	●	●	●	●	●	●	●	-	●	●
	-	-		-	-	-	-	-	24	10	06525145	●	●	●	●	●	●	●	●	●	●	-	●	●
	(8)/135	-		35-45	-	-	ø20	-	4	6	05112233	●	●	●	●	●	●	●	●	●	●	-	●	●
	(7)/135	-		35-45	-	-	ø20	-	4	6	05112234	●	●	●	●	●	●	●	●	●	●	-	●	●
	(6)/135	-		35-45	-	-	ø20	-	4	6	05112235	●	●	●	●	●	●	●	●	●	●	-	●	●
	(5)/135	-		35-45	-	-	ø20	-	4	6	05112259	●	●	●	●	●	●	●	●	●	●	-	●	●
	(4)/135	-		35-45	-	-	ø20	-	4	6	05112260	●	●	●	●	●	●	●	●	●	●	-	●	●

GAIA

design Leo De Carlo

CE

BRASS | **ZAMAK** | ALU | AISI 316 | AISI 304

MANIGLIA PER PORTE INTERNE – SUPPORTO ø52x10mm_INTERNAL DOORS HANDLE – SUPPORT ø52x10mm

CARATTERISTICHE_FEATURES	**FISSAGGIO**_FIXING	**FINITURE**_FINISHES	**OPZIONI**_OPTIONS
CLAQ		L.000h 500h 500h 500h 500h PVD 500h 500h	EN-179 REI-60 IP-65

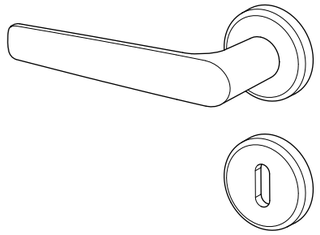

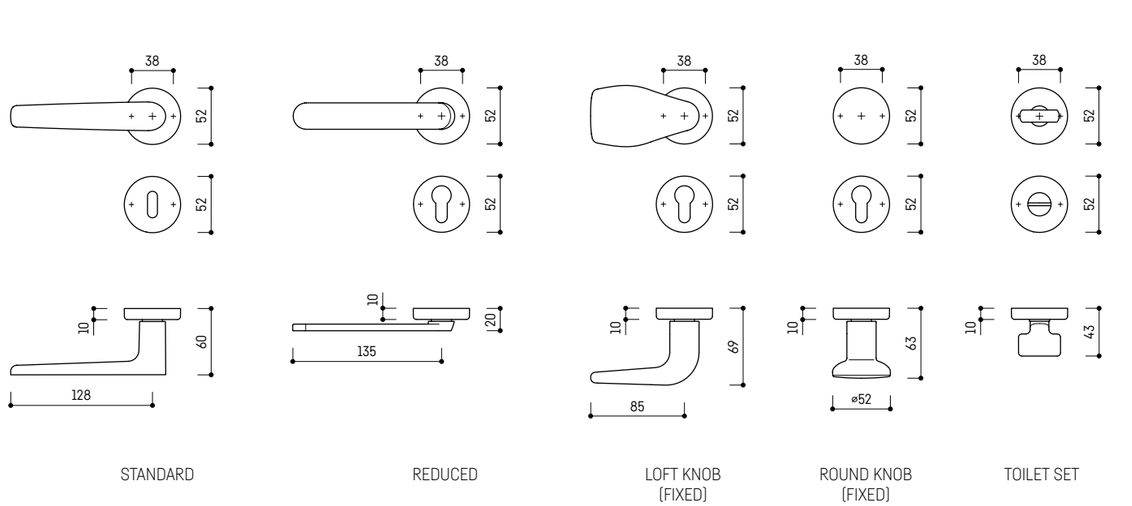

STANDARD | REDUCED | LOFT KNOB (FIXED) | ROUND KNOB (FIXED) | TOILET SET

VERSIONI DISPONIBILI_AVAILABLE VERSIONS

CAPITOLATO_SPECIFICATION

ULTRACYCLE®

ULTRACYCLE® tested for over **1.000.000** cycles - **CLASS 4**

NORMA DIN EN 1906_DIN EN 1906 NORM

4 | 7 | - | 0 | 0 | 4 | 0 | A

Per una descrizione dettagliata di tutte le specifiche tecniche presenti nel prodotto, da impiegare nei capitolati o nelle offerte pubbliche, fate riferimento alla sezione CAPITOLATI_for a detailed description of all the technical informations contained in the product, to be used in the specifications or in public tenders, please refer to the SPECIFICATIONS section.

Descrizione_Description **GAIA**_design Leo De Carlo

ZAMAK

Supporto_Support **ø52x10mm**

■	+											PLATINUM ABACO* 62	BLACK PEARL ABACO* 50	PLATINUM 03	BLACK PEARL 04	COPPER PEARL 5B	NOIR PEARL 08	COPPER SHINING 52	CRYSTAL SHINING 07	NATURAL GOLD 51	WHITE PEARL 02
8*			-	3,9x25 3,9x50	38	Ø8	-	12	2	07902055	-	-	●	●	●	●	-	●	●	●
7*			-	3,9x25 3,9x50	38	Ø8	-	12	2	07902056	-	-	●	●	●	●	-	●	●	●
8/135			35-45	3,9x50	38	Ø8	-	12	2	07902054	-	-	●	●	●	●	-	●	●	●
8/135			35-45	3,9x25 3,9x50	38	Ø8	-	12	2	07902051	-	-	●	●	●	●	-	●	●	●
7/135			35-45	3,9x25 3,9x50	38	Ø8	-	12	2	07902007	-	-	●	●	●	●	-	●	●	●
8/135			35-65	3,9x25	38	Ø8	-	12	2	07902052	-	-	●	●	●	●	-	●	●	●
7/135			35-65	3,9x25	38	Ø8	-	12	2	07902053	-	-	●	●	●	●	-	●	●	●
8/135			35-45	3,9x50	38	Ø8	-	12	2	07902058	-	-	●	●	●	●	-	●	●	●
8/135			35-45	3,9x25 3,9x50	38	Ø8	-	12	2	07902061	-	-	●	●	●	●	-	●	●	●
7/135			35-45	3,9x25 3,9x50	38	Ø8	-	12	2	07902062	-	-	●	●	●	●	-	●	●	●
8/135			35-45	3,9x25	38	-	-	12	2	07902065	-	-	●	●	●	●	-	●	●	●
7/135			35-45	3,9x25	38	-	-	12	2	07902066	-	-	●	●	●	●	-	●	●	●
8/135			35-45	3,9x50	38	Ø8	-	12	2	07902057	-	-	●	●	●	●	-	●	●	●
8/160			60-90	3,9x25 3,9x75 3,9x95	38	Ø8	-	12	2	07902067	-	-	●	●	●	●	-	●	●	●
8/135			35-45	3,9x25 3,9x50	38	Ø8	-	12	2	07902059	-	-	●	●	●	●	-	●	●	●
8/160			60-90	3,9x25 3,9x75 3,9x95	38	Ø8	-	12	2	07902068	-	-	●	●	●	●	-	●	●	●
7/135			35-45	3,9x25 3,9x50	38	Ø8	-	12	2	07902060	-	-	●	●	●	●	-	●	●	●
7/160			60-90	3,9x25 3,9x75 3,9x95	38	Ø8	-	12	2	07902069	-	-	●	●	●	●	-	●	●	●
8/135			35-65	3,9x25	38	Ø8	-	12	2	07902063	-	-	●	●	●	●	-	●	●	●
8/160			60-90	3,9x25	38	Ø8	-	12	2	07902070	-	-	●	●	●	●	-	●	●	●
7/135			35-65	3,9x25	38	Ø8	-	12	2	07902064	-	-	●	●	●	●	-	●	●	●
7/160			60-90	3,9x25	38	Ø8	-	12	2	07902071	-	-	●	●	●	●	-	●	●	●
(8)/135			35-45	3,9x50	38	Ø8	-	4	6	05112122	-	-	●	●	●	●	-	●	●	●

Descrizione_Description **GAIA**_design Leo De Carlo

ZAMAK

Supporto_Support **ø52x10mm**

■	+											PLATINUM ABACO* 62	BLACK PEARL ABACO* 50	PLATINUM 03	BLACK PEARL 04	COPPER PEARL 5B	NOIR PEARL 08	COPPER SHINING 52	CRYSTAL SHINING 07	NATURAL GOLD 51	WHITE PEARL 02
(8)/135			35-45	3,9x25 3,9x50	38	Ø8	-	4	6	05112110	-	-	●	●	●	●	-	●	●	●
(7)/135			35-45	3,9x25 3,9x50	38	Ø8	-	4	6	05112111	-	-	●	●	●	●	-	●	●	●
(6)/135			35-45	3,9x25 3,9x50	38	Ø8	-	4	6	05112112	-	-	●	●	●	●	-	●	●	●
(5)/135			35-45	3,9x25 3,9x50	38	Ø8	-	4	6	05112254	-	-	●	●	●	●	-	●	●	●
(4)/135			35-45	3,9x25 3,9x50	38	Ø8	-	4	6	05112113	-	-	●	●	●	●	-	●	●	●
8/135			35-45	3,9x25 3,9x50	38	Ø8	-	12	1	19402005	-	-	●	●	●	●	-	●	●	●
7/135			35-45	3,9x25 3,9x50	38	Ø8	-	12	1	19402006	-	-	●	●	●	●	-	●	●	●
8/155			50-55	3,9x25 3,9x70	38	Ø8	-	12	1	19402007	-	-	●	●	●	●	-	●	●	●
7/155			50-55	3,9x25 3,9x70	38	Ø8	-	12	1	19402008	-	-	●	●	●	●	-	●	●	●
8/165			60-75	3,9x25 3,9x65 3,9x75 3,9x95	38	Ø8	-	12	1	19402009	●	●	●	●	●	●	-	●	●	●
7/165			60-75	3,9x25 3,9x65 3,9x75 3,9x95	38	Ø8	-	12	1	19402010	●	●	●	●	●	●	-	●	●	●
8/175			75-90	3,9x25 3,9x65 3,9x75 3,9x95	38	Ø8	-	12	1	19402011	●	●	●	●	●	●	-	●	●	●
7/175			75-90	3,9x25 3,9x65 3,9x75 3,9x95	38	Ø8	-	12	1	19402012	●	●	●	●	●	●	-	●	●	●

Descrizione_Description **1/2 ferro ancora**_1/2 anchor spindle

STEEL

Supporto_Support -

■	+										MECHANISM 26
8/60		-	-	-	-	-	-	10	8	06727462	●
8/70		-	-	-	-	-	-	10	8	06727427	●
8/80		-	-	-	-	-	-	10	8	06727428	●
8/90		-	-	-	-	-	-	10	8	06727429	●
8/100		-	-	-	-	-	-	10	8	06727463	●
7/60		-	-	-	-	-	-	10	8	06727432	●
7/70		-	-	-	-	-	-	10	8	06727433	●
7/80		-	-	-	-	-	-	10	8	06727434	●
7/90		-	-	-	-	-	-	10	8	06727435	●
7/100		-	-	-	-	-	-	10	8	06727436	●

Descrizione_Description: **LOFT/ROUND** pomolo fisso_fixed knob

ZAMAK

Supporto_Support: ø52x10mm

											PLATINUM ABACO® 62	BLACK PEARL ABACO® 50	PLATINUM PVD 03	BLACK PEARL PVD 04	COPPER PEARL PVD 5B	NOIR PEARL PVD 08	COPPER SHINING PVD 52	CRYSTAL SHINING PVD 07	NATURAL GOLD PVD 51	WHITE PEARL PVD 02
7° or 8°	CLAG		-	3,9x25 3,9x50	38	Ø8	-	12	1	17002001	●	●	●	●	●	●	●	●	●	●
7° or 8°	CLAG		-	3,9x25 3,9x50	38	Ø8	-	12	1	19602001	●	●	●	●	●	●	●	●	●	●

Descrizione_Description: **1/2 ferro per pomolo fisso**_1/2 fixed knob spindle

STEEL

Supporto_Support: -

											MECHANISM 26
7/90	CLAG	-	45-55	-	-	-	-	10	8	06727507	●
7/100	CLAG	-	50-65	-	-	-	-	10	8	06727508	●
7/110	CLAG	-	60-75	-	-	-	-	10	8	06727509	●
7/120	CLAG	-	70-85	-	-	-	-	10	8	06727510	●
7/130	CLAG	-	80-95	-	-	-	-	10	8	06727551	●
7/140	CLAG	-	90-105	-	-	-	-	10	8	06727552	●
8/90	CLAG	-	45-55	-	-	-	-	10	8	06727503	●
8/100	CLAG	-	50-65	-	-	-	-	10	8	06727504	●
8/110	CLAG	-	60-75	-	-	-	-	10	8	06727505	●
8/120	CLAG	-	70-85	-	-	-	-	10	8	06727506	●
8/130	CLAG	-	80-95	-	-	-	-	10	8	06727549	●
8/140	CLAG	-	90-105	-	-	-	-	10	8	06727550	●

GAIA

design Leo De Carlo

CE

BRASS | **ZAMAK** | ALU | AISI 316 | AISI 304

MANIGLIA PER PORTE INTERNE – SUPPORTO ø45X8mm_INTERNAL DOORS HANDLE – SUPPORT ø45X8mm

CARATTERISTICHE_FEATURES	FISSAGGIO_FIXING	FINITURE_FINISHES	OPZIONI_OPTIONS
CLAG		1.000h, 304 500h, 316 500h, 500h, 500h, PVD 500h, 500h	EN-179, REI-60, IP-65

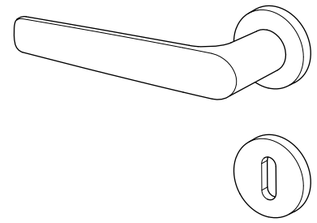

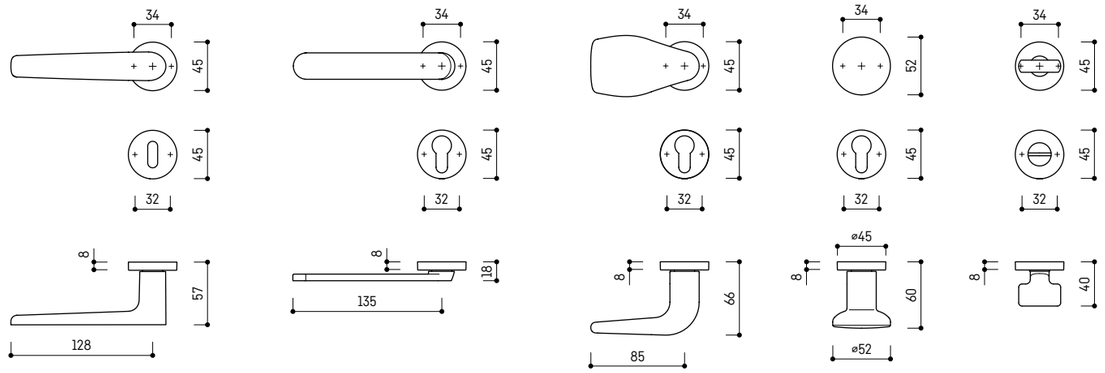

STANDARD | REDUCED | LOFT KNOB (FIXED) | ROUND KNOB (FIXED) | TOILET SET

VERSIONI DISPONIBILI_AVAILABLE VERSIONS

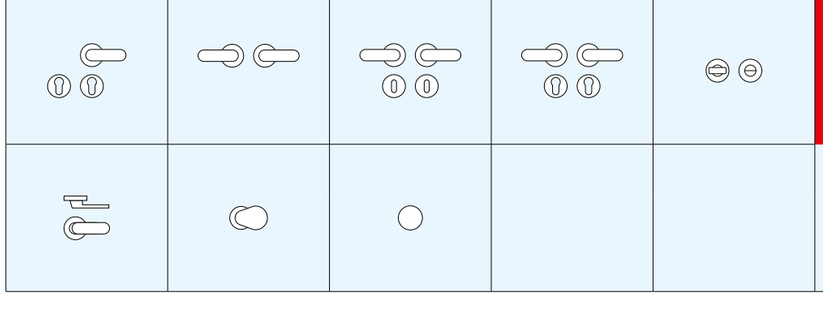

CAPITOLATO_SPECIFICATION

ULTRACYCLE®

ULTRACYCLE® tested for over **1.000.000** cycles - **CLASS 4**

NORMA DIN EN 1906_DIN EN 1906 NORM

4 7 - 0 0 4 0 A

Per una descrizione dettagliata di tutte le specifiche tecniche presenti nel prodotto, da impiegare nei capitolati o nelle offerte pubbliche, fate riferimento alla sezione CAPITOLATI_for a detailed description of all the technical informations contained in the product, to be used in the specifications or in public tenders, please refer to the SPECIFICATIONS section.

Descrizione_Description **GAIA**_design Leo De Carlo

ZAMAK

Supporto_Support **ø45X8mm**

	■	+										PLATINUM ABACO® 62	BLACK PEARL ABACO® 50	PLATINUM 03	BLACK PEARL 04	COPPER PEARL 5B	NOIR PEARL 08	COPPER SHINING 52	CRYSTAL SHINING 07	NATURAL GOLD 51	WHITE PEARL 02
	8*	CLAC		-	3,9x25	34/32	-	-	12	2	07977002	-	-	●	●	●	●	-	●	●	●
	7*	CLAC		-	3,9x25	34/32	-	-	12	2	07977003	-	-	●	●	●	●	-	●	●	●
	8/135	CLAC		35-45	3,9x25	34	-	-	12	2	07977004	-	-	●	●	●	●	-	●	●	●
	7/135	CLAC		35-45	3,9x25	34	-	-	12	2	07977005	-	-	●	●	●	●	-	●	●	●
	8/135	CLAC		35-45	3,9x25	34/32	-	-	12	2	07977007	-	-	●	●	●	●	-	●	●	●
	7/135	CLAC		35-45	3,9x25	34/32	-	-	12	2	07977008	-	-	●	●	●	●	-	●	●	●
	8/135	CLAC		35-65	3,9x25	34/32	-	-	12	2	07977006	-	-	●	●	●	●	-	●	●	●
	7/135	CLAC		35-65	3,9x25	34/32	-	-	12	2	07977001	-	-	●	●	●	●	-	●	●	●
	8/160	CLAC		60-90	3,9x25	34/32	-	-	12	2	07977009	-	-	●	●	●	●	-	●	●	●
	7/160	CLAC		60-90	3,9x25	34/32	-	-	12	2	07977010	-	-	●	●	●	●	-	●	●	●
	(8)/135	-		35-45	3,9x25	34/32	-	-	4	6	05112197	-	-	●	●	●	●	-	●	●	●
	(7)/135	-		35-45	3,9x25	34/32	-	-	4	6	05112198	-	-	●	●	●	●	-	●	●	●
	(6)/135	-		35-45	3,9x25	34/32	-	-	4	6	05112199	-	-	●	●	●	●	-	●	●	●
	(5)/135	-		35-45	3,9x25	34/32	-	-	4	6	05112257	-	-	●	●	●	●	-	●	●	●
	(4)/135	-		35-45	3,9x25	34/32	-	-	4	6	05112200	-	-	●	●	●	●	-	●	●	●
	8/135	CLAC		35-45	3,9x25	34	-	-	12	1	19477001	-	-	●	●	●	●	-	●	●	●
	7/135	CLAC		35-45	3,9x25	34	-	-	12	1	19477002	-	-	●	●	●	●	-	●	●	●
	8/155	CLAC		50-55	3,9x25	34	-	-	12	1	19477003	-	-	●	●	●	●	-	●	●	●
	7/155	CLAC		50-55	3,9x25	34	-	-	12	1	19497004	-	-	●	●	●	●	-	●	●	●
	8/165	CLAC		60-75	3,9x25	34	-	-	12	1	19477005	-	-	●	●	●	●	-	●	●	●
	7/165	CLAC		60-75	3,9x25	34	-	-	12	1	19477006	-	-	●	●	●	●	-	●	●	●
	8/175	CLAC		75-90	3,9x25	34	-	-	12	1	19477007	-	-	●	●	●	●	-	●	●	●
	7/175	CLAC		75-90	3,9x25	34	-	-	12	1	19477008	-	-	●	●	●	●	-	●	●	●

Descrizione_Description **1/2 ferro ancora**_1/2 anchor spindle

STEEL

Supporto_Support -

	■	+										MECHANISM 26
	8/60	CLAC CE	-	-	-	-	-	-	10	8	06727462	●
	8/70	CLAC CE	-	-	-	-	-	-	10	8	06727427	●
	8/80	CLAC CE	-	-	-	-	-	-	10	8	06727428	●
	8/90	CLAC CE	-	-	-	-	-	-	10	8	06727429	●
	8/100	CLAC CE	-	-	-	-	-	-	10	8	06727463	●
	7/60	CLAC CE	-	-	-	-	-	-	10	8	06727432	●
	7/70	CLAC CE	-	-	-	-	-	-	10	8	06727433	●
	7/80	CLAC CE	-	-	-	-	-	-	10	8	06727434	●
	7/90	CLAC CE	-	-	-	-	-	-	10	8	06727435	●
	7/100	CLAC CE	-	-	-	-	-	-	10	8	06727436	●

Descrizione_Description **LOFT/ROUND** pomolo fisso_fixed knob

ZAMAK

Supporto_Support **ø45X8mm**

	■	+										PLATINUM ABACO® 62	BLACK PEARL ABACO® 50	PLATINUM 03	BLACK PEARL 04	COPPER PEARL 5B	NOIR PEARL 08	COPPER SHINING 52	CRYSTAL SHINING 07	NATURAL GOLD 51	WHITE PEARL 02
	7* or 8*	CLAC		-	3,9x25	34	-	-	12	1	17077001	-	-	●	●	●	●	●	●	●	●
	7* or 8*	CLAC		-	3,9x25	34	-	-	12	1	19677001	-	-	●	●	●	●	●	●	●	●

Descrizione_Description **1/2 ferro per pomolo fisso**_1/2 fixed knob spindle

STEEL

Supporto_Support -

	■	+										MECHANISM 26
	7/90	CLAC CE	-	45-55	-	-	-	-	10	8	06727507	●
	7/100	CLAC CE	-	50-65	-	-	-	-	10	8	06727508	●
	7/110	CLAC CE	-	60-75	-	-	-	-	10	8	06727509	●
	7/120	CLAC CE	-	70-85	-	-	-	-	10	8	06727510	●
	7/130	CLAC CE	-	80-95	-	-	-	-	10	8	06727551	●
	7/140	CLAC CE	-	90-105	-	-	-	-	10	8	06727552	●
	8/90	CLAC CE	-	45-55	-	-	-	-	10	8	06727503	●
	8/100	CLAC CE	-	50-65	-	-	-	-	10	8	06727504	●
	8/110	CLAC CE	-	60-75	-	-	-	-	10	8	06727505	●
	8/120	CLAC CE	-	70-85	-	-	-	-	10	8	06727506	●
	8/130	CLAC CE	-	80-95	-	-	-	-	10	8	06727549	●
	8/140	CLAC CE	-	90-105	-	-	-	-	10	8	06727550	●

GAIA

design Leo De Carlo

CE

BRASS | **ZAMAK** | ALU | AISI 316 | AISI 304

MANIGLIA PER PORTE INTERNE – SUPPORTO MINIMAL ø25x2mm_INTERNAL DOORS HANDLE – SUPPORT MINIMAL ø25x2mm

CARATTERISTICHE_FEATURES	**FISSAGGIO**_FIXING	**FINITURE**_FINISHES	**OPZIONI**_OPTIONS

1.000h | 500h | 500h | 500h | 500h | PVD 500h | 500h | EN-179 | REI-60 | IP-65

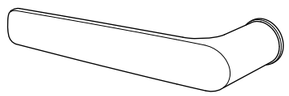

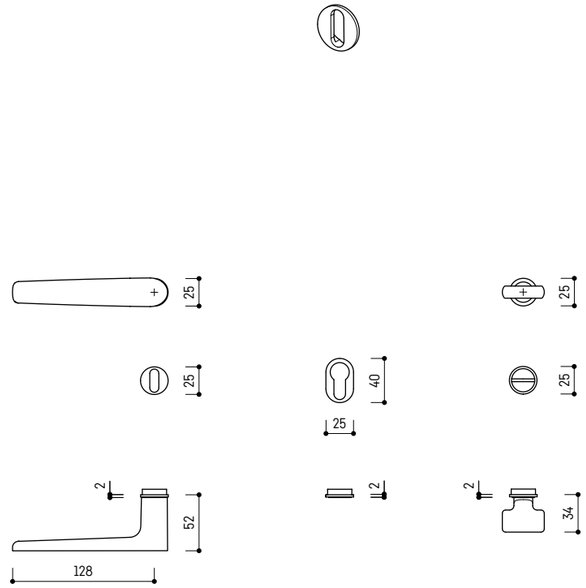

STANDARD TOILET SET

VERSIONI DISPONIBILI_AVAILABLE VERSIONS

CAPITOLATO_SPECIFICATION

ULTRACYCLE®

ULTRACYCLE® tested for over **1.000.000** cycles - **CLASS 4**

NORMA DIN EN 1906_DIN EN 1906 NORM

4 | 7 | - | 0 | 0 | 4 | 0 | A

Per una descrizione dettagliata di tutte le specifiche tecniche presenti nel prodotto, da impiegare nei capitolati o nelle offerte pubbliche, fate riferimento alla sezione CAPITOLATI_for a detailed description of all the technical informations contained in the product, to be used in the specifications or in public tenders, please refer to the SPECIFICATIONS section.

Descrizione_Description: **GAIA**_design Leo De Carlo

ZAMAK

Supporto_Support: **MINIMAL ø25x2mm**

■	+			X							PLATINUM ABACO* 62	BLACK PEARL ABACO* 50	PLATINUM 03	BLACK PEARL 04	COPPER PEARL 5B	NOIR PEARL 08	COPPER SHINING 52	CRYSTAL SHINING 07	NATURAL GOLD 51	WHITE PEARL 02
8/135	CLAQ	◎	35-45	-	-	ø20	-	12	2	07946001	-	-	●	●	●	●	-	●	●	●
7/135	CLAQ	◎	35-45	-	-	ø20	-	12	2	07946002	-	-	●	●	●	●	-	●	●	●
-	CLAQ	◎	-	-	-	ø20	-	24	10	06548093	-	-	●	●	●	●	-	●	●	●
-	-	◎	-	-	-	ø20	-	24	10	06525146	-	-	●	●	●	●	-	●	●	●
-	-	◎	-	-	-	-	-	24	10	06525145	-	-	●	●	●	●	-	●	●	●
(8)/135	-	◎	35-45	-	-	ø20	-	4	6	05112233	-	-	●	●	●	●	-	●	●	●
(7)/135	-	◎	35-45	-	-	ø20	-	4	6	05112234	-	-	●	●	●	●	-	●	●	●
(6)/135	-	◎	35-45	-	-	ø20	-	4	6	05112235	-	-	●	●	●	●	-	●	●	●
(5)/135	-	◎	35-45	-	-	ø20	-	4	6	05112259	-	-	●	●	●	●	-	●	●	●
(4)/135	-	◎	35-45	-	-	ø20	-	4	6	05112260	-	-	●	●	●	●	-	●	●	●

GAIA

design Leo De Carlo

CE

BRASS | **ZAMAK** | ALU | AISI 316 | AISI 304

MANIGLIA PER PORTE INTERNE – SUPPORTO EASYPIN ø55x2mm _INTERNAL DOORS HANDLE – SUPPORT EASYPIN ø55x2mm

CARATTERISTICHE_FEATURES	**FISSAGGIO**_FIXING	**FINITURE**_FINISHES	**OPZIONI**_OPTIONS

1.000h	304 500h	316 500h	500h	500h	PVD 500h	500h	EN-179	REI-60	IP-65

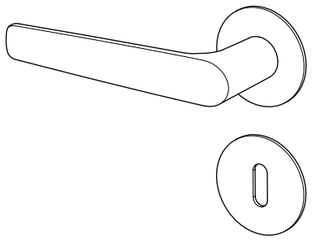

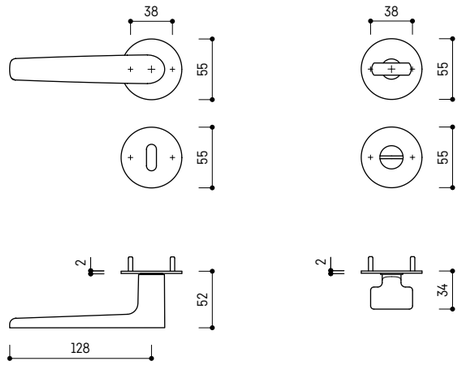

STANDARD TOILET SET

VERSIONI DISPONIBILI_AVAILABLE VERSIONS

CAPITOLATO_SPECIFICATION

ULTRACYCLE®

ULTRACYCLE® tested for over **1.000.000** cycles - **CLASS 4**

NORMA DIN EN 1906_DIN EN 1906 NORM

4 | 7 | - | 0 | 0 | 4 | 0 | A

Per una descrizione dettagliata di tutte le specifiche tecniche presenti nel prodotto, da impiegare nei capitolati o nelle offerte pubbliche, fate riferimento alla sezione CAPITOLATI_for a detailed description of all the technical informations contained in the product, to be used in the specifications or in public tenders, please refer to the SPECIFICATIONS section.

Descrizione_Description: **GAIA**_design Leo De Carlo

Supporto_Support: ZAMAK – **EASYPIN ø55x2mm**

■	+	x	PLATINUM ABACO* 62	BLACK PEARL ABACO* 50	PLATINUM 03	BLACK PEARL 04	COPPER PEARL 5B	NOIR PEARL 08	COPPER SHINING 52	CRYSTAL SHINING 07	NATURAL GOLD 51	WHITE PEARL 02
8/135	CLAQ	35-45	-	-	●	●	●	●	-	●	●	●
7/135	CLAQ	35-45	-	-	●	●	●	●	-	●	●	●
-	CLAQ	-	-	-	●	●	●	●	-	●	●	●
-	-	-	-	-	●	●	●	●	-	●	●	●
-	-	-	-	-	●	●	●	●	-	●	●	●
(8)/135	-	35-45	-	-	●	●	●	●	-	●	●	●
(7)/135	-	35-45	-	-	●	●	●	●	-	●	●	●
(6)/135	-	35-45	-	-	●	●	●	●	-	●	●	●
(5)/135	-	35-45	-	-	●	●	●	●	-	●	●	●
(4)/135	-	35-45	-	-	●	●	●	●	-	●	●	●

38	55	24	10	06548077
38	55	24	10	06525121
38	55	24	10	06525120
38	55	4	6	05112251
38	55	4	6	05112261
38	55	4	6	05112262
38	55	4	6	05112263
38	55	4	6	05112264

GAIA

design Leo De Carlo

BRASS | **ZAMAK** | ALU | AISI 316 | AISI 304

MANIGLIA PER PORTE INTERNE – SUPPORTO 40x235x9mm_INTERNAL DOORS HANDLE – SUPPORT 40x235x9mm

CARATTERISTICHE_FEATURES	FISSAGGIO_FIXING	FINITURE_FINISHES	OPZIONI_OPTIONS
CLAQ		1.000h, 304 500h, 316 500h, 500h, 500h, PVD 500h, 500h	EN-179, REI-60, IP-65

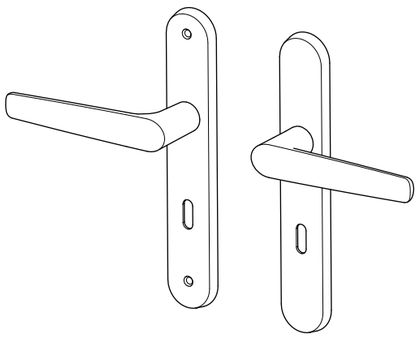

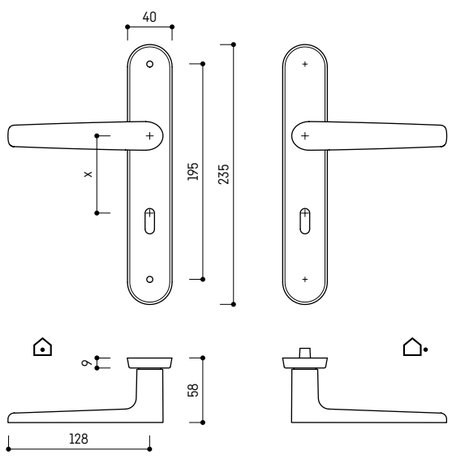

VERSIONI DISPONIBILI_AVAILABLE VERSIONS

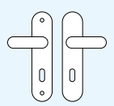

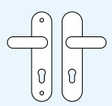

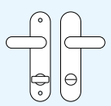

CAPITOLATO_SPECIFICATION

ULTRACYCLE®

ULTRACYCLE® tested for over **1.000.000** cycles - **CLASS 4**

NORMA DIN EN 1906_DIN EN 1906 NORM

4 | 7 | - | 0 | 0 | 4 | 0 | A

Per una descrizione dettagliata di tutte le specifiche tecniche presenti nel prodotto, da impiegare nei capitolati o nelle offerte pubbliche, fate riferimento alla sezione CAPITOLATI_for a detailed description of all the technical informations contained in the product, to be used in the specifications or in public tenders, please refer to the SPECIFICATIONS section.

Descrizione_Description	**GAIA**_design Leo De Carlo
	ZAMAK
Supporto_Support	**40x235x9mm**

												PLATINUM ABACO® 62	BLACK PEARL ABACO® 50	PLATINUM PVD 03	BLACK PEARL PVD 04	COPPER PEARL PVD 5B	NOIR PEARL PVD 08	COPPER SHINING PVD 52	CRYSTAL SHINING PVD 07	NATURAL GOLD PVD 51	WHITE PEARL PVD 02
	8/135	CLAQ		35-55	M4x75 SEC	195	Ø10	72	12	2	07901086	-	-	●	●	●	●	-	●	●	●
	7/135	CLAQ		35-55	M4x75 SEC	195	Ø10	70	12	2	07901022	-	-	●	●	●	●	-	●	●	●
	8/135	CLAQ		35-55	M4x75 SEC	195	Ø10	72	12	2	07901085	-	-	●	●	●	●	-	●	●	●
	7/135	CLAQ		35-55	M4x75 SEC	195	Ø10	70	12	2	07901023	-	-	●	●	●	●	-	●	●	●
	8(8)/135	CLAQ		35-55	M4x75 SEC	195	Ø10	78	12	2	07901087	-	-	●	●	●	●	-	●	●	●
	7(6)/135	CLAQ		35-55	M4x75 SEC	195	Ø10	70	12	2	07902027	-	-	●	●	●	●	-	●	●	●

GIOIA

design Leo De Carlo

CE

BRASS · **ZAMAK** · ALU · AISI 316 · AISI 304

MANIGLIA PER PORTE INTERNE – SUPPORTO ø52x10mm_INTERNAL DOORS HANDLE – SUPPORT ø52x10mm

CARATTERISTICHE_FEATURES	**FISSAGGIO**_FIXING	**FINITURE**_FINISHES	**OPZIONI**_OPTIONS
CLIAQ		1.000h · 500h · 500h · 500h · 500h · PVD 500h · 500h	EN-179 · REI-60 · IP-65

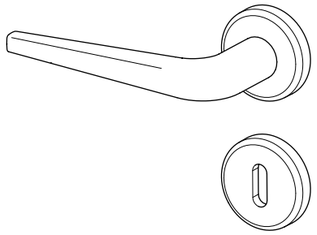

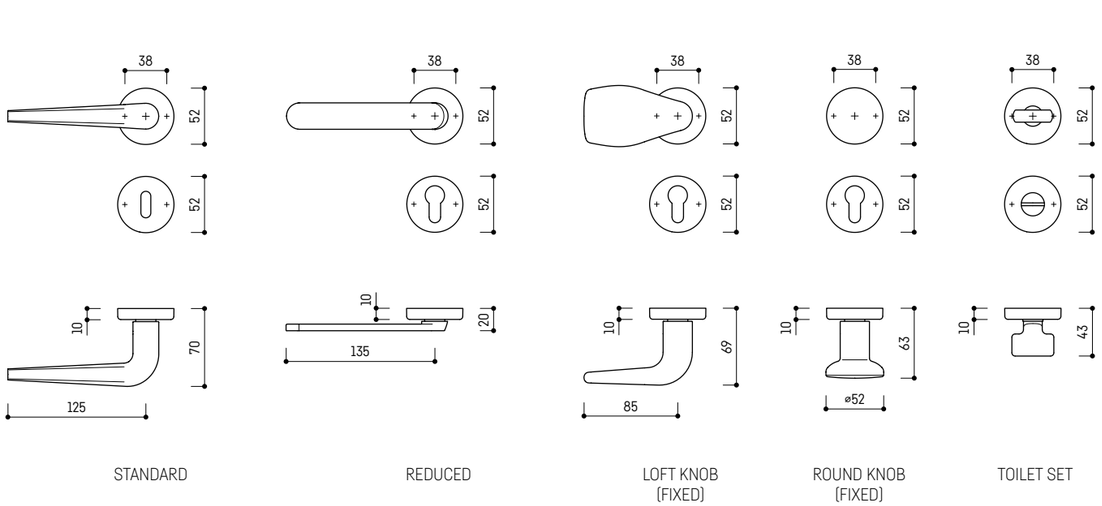

STANDARD · REDUCED · LOFT KNOB (FIXED) · ROUND KNOB (FIXED) · TOILET SET

VERSIONI DISPONIBILI_AVAILABLE VERSIONS

CAPITOLATO_SPECIFICATION

ULTRACYCLE®

ULTRACYCLE® tested for over **1.000.000** cycles - **CLASS 4**

NORMA DIN EN 1906_DIN EN 1906 NORM

4 | 7 | - | 0 | 0 | 4 | 0 | A

Per una descrizione dettagliata di tutte le specifiche tecniche presenti nel prodotto, da impiegare nei capitolati o nelle offerte pubbliche, fate riferimento alla sezione CAPITOLATI_for a detailed description of all the technical informations contained in the product, to be used in the specifications or in public tenders, please refer to the SPECIFICATIONS section.

Descrizione_Description: **GIOIA**_design Leo De Carlo

ZAMAK

Supporto_Support: **ø52x10mm**

■	+	X	X	PLATINUM ABACO* 62	BLACK PEARL ABACO* 50	PLATINUM 03	BLACK PEARL 04	COPPER PEARL 5B	NOIR PEARL 08	COPPER SHINING 52	CRYSTAL SHINING 07	NATURAL GOLD 51	WHITE PEARL 02
8*	-	3,9x25 3,9x50	38	Ø8	-	12	2	07502046	-	-	●	●	●	●	-	●	●	●
7*	-	3,9x25 3,9x50	38	Ø8	-	12	2	07502047	-	-	●	●	●	●	-	●	●	●
8/135	35-45	3,9x50	38	Ø8	-	12	2	07502045	-	-	●	●	●	●	-	●	●	●
8/135	35-45	3,9x25 3,9x50	38	Ø8	-	12	2	07504042	-	-	●	●	●	●	-	●	●	●
7/135	35-45	3,9x25 3,9x50	38	Ø8	-	12	2	07502005	-	-	●	●	●	●	-	●	●	●
8/135	35-65	3,9x25	38	Ø8	-	12	2	07502043	-	-	●	●	●	●	-	●	●	●
7/135	35-65	3,9x25	38	Ø8	-	12	2	07502044	-	-	●	●	●	●	-	●	●	●
8/135	35-45	3,9x50	38	Ø8	-	12	2	07502049	-	-	●	●	●	●	-	●	●	●
8/135	35-45	3,9x25 3,9x50	38	Ø8	-	12	2	07502051	-	-	●	●	●	●	-	●	●	●
7/135	35-45	3,9x25 3,9x50	38	Ø8	-	12	2	07502006	-	-	●	●	●	●	-	●	●	●
8/135	35-45	3,9x25	38	-	-	12	2	07502054	-	-	●	●	●	●	-	●	●	●
7/135	35-45	3,9x25	38	-	-	12	2	07502055	-	-	●	●	●	●	-	●	●	●
8/135	35-45	3,9x50	38	Ø8	-	12	2	07502048	-	-	●	●	●	●	-	●	●	●
8/160	60-90	3,9x25 3,9x75 3,9x95	38	Ø8	-	12	2	07502056	-	-	●	●	●	●	-	●	●	●
8/135	35-45	3,9x25 3,9x50	38	Ø8	-	12	2	07502050	-	-	●	●	●	●	-	●	●	●
8/160	60-90	3,9x25 3,9x75 3,9x95	38	Ø8	-	12	2	07502057	-	-	●	●	●	●	-	●	●	●
7/135	35-45	3,9x25 3,9x50	38	Ø8	-	12	2	07502007	-	-	●	●	●	●	-	●	●	●
7/160	60-90	3,9x25 3,9x75 3,9x95	38	Ø8	-	12	2	07502058	-	-	●	●	●	●	-	●	●	●
8/135	35-65	3,9x25	38	Ø8	-	12	2	07502052	-	-	●	●	●	●	-	●	●	●
8/160	60-90	3,9x25	38	Ø8	-	12	2	07502059	-	-	●	●	●	●	-	●	●	●
7/135	35-65	3,9x25	38	Ø8	-	12	2	07502053	-	-	●	●	●	●	-	●	●	●
7/160	60-90	3,9x25	38	Ø8	-	12	2	07502060	-	-	●	●	●	●	-	●	●	●
(8)/135	35-45	3,9x50	38	Ø8	-	4	6	05112122	-	-	●	●	●	●	-	●	●	●

Descrizione_Description **GIOIA**_design Leo De Carlo

ZAMAK

Supporto_Support **ø52x10mm**

												PLATINUM ABACO* 62	BLACK PEARL ABACO* 50	PLATINUM 03	BLACK PEARL 04	COPPER PEARL 5B	NOIR PEARL 08	COPPER SHINING 52	CRYSTAL SHINING 07	NATURAL GOLD 51	WHITE PEARL 02
	(8)/135			35-45	3,9x25 3,9x50	38	Ø8	-	4	6	05112110	-	-	●	●	●	●	-	●	●	●
	(7)/135			35-45	3,9x25 3,9x50	38	Ø8	-	4	6	05112111	-	-	●	●	●	●	-	●	●	●
	(6)/135			35-45	3,9x25 3,9x50	38	Ø8	-	4	6	05112112	-	-	●	●	●	●	-	●	●	●
	(5)/135			35-45	3,9x25 3,9x50	38	Ø8	-	4	6	05112254	-	-	●	●	●	●	-	●	●	●
	(4)/135			35-45	3,9x25 3,9x50	38	Ø8	-	4	6	05112113	-	-	●	●	●	●	-	●	●	●
	8/135	GLAS		35-45	3,9x25 3,9x50	38	Ø8	-	12	1	19402005	-	-	●	●	●	●	-	●	●	●
	7/135	GLAS		35-45	3,9x25 3,9x50	38	Ø8	-	12	1	19402006	-	-	●	●	●	●	-	●	●	●
	8/155	GLAS		50-55	3,9x25 3,9x70	38	Ø8	-	12	1	19402007	-	-	●	●	●	●	-	●	●	●
	7/155	GLAS		50-55	3,9x25 3,9x70	38	Ø8	-	12	1	19402008	-	-	●	●	●	●	-	●	●	●
	8/165	GLAS		60-75	3,9x25 3,9x65 3,9x75 3,9x95	38	Ø8	-	12	1	19402009	-	-	●	●	●	●	-	●	●	●
	7/165	GLAS		60-75	3,9x25 3,9x65 3,9x75 3,9x95	38	Ø8	-	12	1	19402010	-	-	●	●	●	●	-	●	●	●
	8/175	GLAS		75-90	3,9x25 3,9x65 3,9x75 3,9x95	38	Ø8	-	12	1	19402011	-	-	●	●	●	●	-	●	●	●
	7/175	GLAS		75-90	3,9x25 3,9x65 3,9x75 3,9x95	38	Ø8	-	12	1	19402012	-	-	●	●	●	●	-	●	●	●

Descrizione_Description **1/2 ferro ancora**_1/2 anchor spindle

STEEL

Supporto_Support -

											MECHANISM 26
	8/60	GLAS CO	-	-	-	-	-	-	10	8	06727462	●
	8/70	GLAS CO	-	-	-	-	-	-	10	8	06727427	●
	8/80	GLAS CO	-	-	-	-	-	-	10	8	06727428	●
	8/90	GLAS CO	-	-	-	-	-	-	10	8	06727429	●
	8/100	GLAS CO	-	-	-	-	-	-	10	8	06727463	●
	7/60	GLAS CO	-	-	-	-	-	-	10	8	06727432	●
	7/70	GLAS CO	-	-	-	-	-	-	10	8	06727433	●
	7/80	GLAS CO	-	-	-	-	-	-	10	8	06727434	●
	7/90	GLAS CO	-	-	-	-	-	-	10	8	06727435	●
	7/100	GLAS CO	-	-	-	-	-	-	10	8	06727436	●

Descrizione_Description **LOFT/ROUND** pomolo fisso_fixed knob

ZAMAK

Supporto_Support **ø52x10mm**

												PLATINUM ABACO* 62	BLACK PEARL ABACO* 50	PLATINUM 03	BLACK PEARL 04	COPPER PEARL 5B	NOIR PEARL 08	COPPER SHINING 52	CRYSTAL SHINING 07	NATURAL GOLD 51	WHITE PEARL 02
	7" or 8"	GLAS		-	3,9x25 3,9x50	38	Ø8	-	12	1	17002001	●	●	●	●	●	●	●	●	●	●
	7" or 8"	GLAS		-	3,9x25 3,9x50	38	Ø8	-	12	1	19602001	●	●	●	●	●	●	●	●	●	●

Descrizione_Description **1/2 ferro per pomolo fisso**_1/2 fixed knob spindle

STEEL

Supporto_Support -

												MECHANISM 26
	7/90	GLAS CO	-	45-55	-	-	-	-	10	8	06727507	●
	7/100	GLAS CO	-	50-65	-	-	-	-	10	8	06727508	●
	7/110	GLAS CO	-	60-75	-	-	-	-	10	8	06727509	●
	7/120	GLAS CO	-	70-85	-	-	-	-	10	8	06727510	●
	7/130	GLAS CO	-	80-95	-	-	-	-	10	8	06727551	●
	7/140	GLAS CO	-	90-105	-	-	-	-	10	8	06727552	●
	8/90	GLAS CO	-	45-55	-	-	-	-	10	8	06727503	●
	8/100	GLAS CO	-	50-65	-	-	-	-	10	8	06727504	●
	8/110	GLAS CO	-	60-75	-	-	-	-	10	8	06727505	●
	8/120	GLAS CO	-	70-85	-	-	-	-	10	8	06727506	●
	8/130	GLAS CO	-	80-95	-	-	-	-	10	8	06727549	●
	8/140	GLAS CO	-	90-105	-	-	-	-	10	8	06727550	●

GIOIA

design Leo De Carlo

CE

BRASS | **ZAMAK** | ALU | AISI 316 | AISI 304

MANIGLIA PER PORTE INTERNE – SUPPORTO ø45X8mm_INTERNAL DOORS HANDLE – SUPPORT ø45X8mm

CARATTERISTICHE_FEATURES	**FISSAGGIO**_FIXING	**FINITURE**_FINISHES	**OPZIONI**_OPTIONS

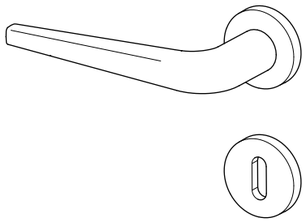

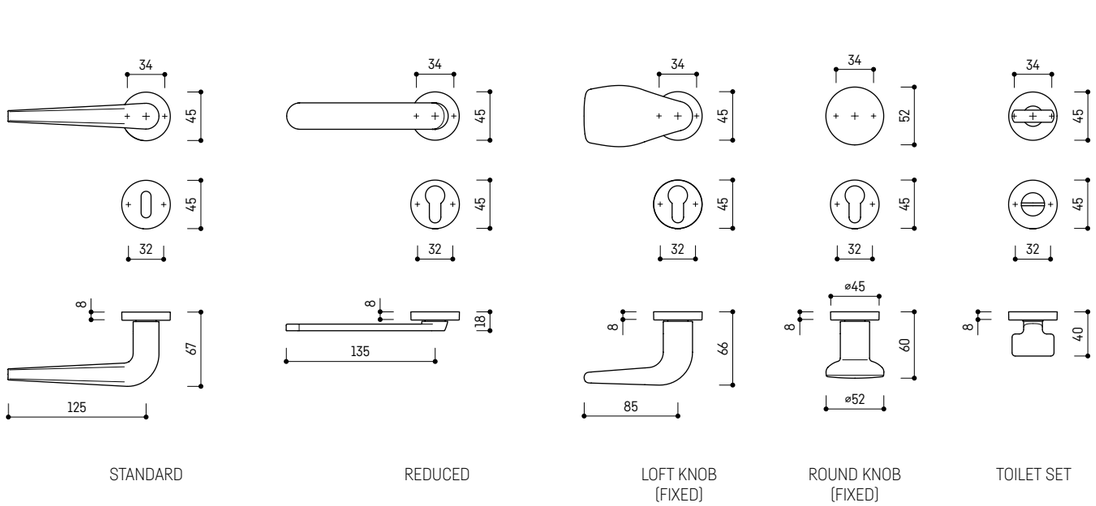

STANDARD | REDUCED | LOFT KNOB (FIXED) | ROUND KNOB (FIXED) | TOILET SET

VERSIONI DISPONIBILI_AVAILABLE VERSIONS

CAPITOLATO_SPECIFICATION

ULTRACYCLE®

ULTRACYCLE® tested for over **1.000.000** cycles - **CLASS 4**

NORMA DIN EN 1906_DIN EN 1906 NORM

4 | 7 | - | 0 | 0 | 4 | 0 | A

Per una descrizione dettagliata di tutte le specifiche tecniche presenti nel prodotto, da impiegare nei capitolati o nelle offerte pubbliche, fate riferimento alla sezione CAPITOLATI_for a detailed description of all the technical informations contained in the product, to be used in the specifications or in public tenders, please refer to the SPECIFICATIONS section.

Descrizione_Description: **GIOIA**_design Leo De Carlo

ZAMAK

Supporto_Support: **ø45X8mm**

	■	+			X							PLATINUM ABACO* 62	BLACK PEARL ABACO* 50	PLATINUM 03	BLACK PEARL 04	COPPER PEARL 5B	NOIR PEARL 08	COPPER SHINING 52	CRYSTAL SHINING 07	NATURAL GOLD 51	WHITE PEARL 02
	8*	CLIAQ		-	3,9x25	34/32	-	-	12	2	07577001	-	-	●	●	●	●	-	●	●	●
	7*	CLIAQ		-	3,9x25	34/32	-	-	12	2	07577002	-	-	●	●	●	●	-	●	●	●
	8/135	CLIAQ		35-45	3,9x25	34	-	-	12	2	07577003	-	-	●	●	●	●	-	●	●	●
	7/135	CLIAQ		35-45	3,9x25	34	-	-	12	2	07577004	-	-	●	●	●	●	-	●	●	●
	8/135	CLIAQ		35-45	3,9x25	34/32	-	-	12	2	07577007	-	-	●	●	●	●	-	●	●	●
	7/135	CLIAQ		35-45	3,9x25	34/32	-	-	12	2	07577008	-	-	●	●	●	●	-	●	●	●
	8/135	CLIAQ		35-65	3,9x25	34/32	-	-	12	2	07577005	-	-	●	●	●	●	-	●	●	●
	7/135	CLIAQ		35-65	3,9x25	34/32	-	-	12	2	07577006	-	-	●	●	●	●	-	●	●	●
	8/160	CLIAQ		60-90	3,9x25	34/32	-	-	12	2	07577009	-	-	●	●	●	●	-	●	●	●
	7/160	CLIAQ		60-90	3,9x25	34/32	-	-	12	2	07577010	-	-	●	●	●	●	-	●	●	●
	(8)/135	-		35-45	3,9x25	34/32	-	-	4	6	05112197	-	-	●	●	●	●	-	●	●	●
	(7)/135	-		35-45	3,9x25	34/32	-	-	4	6	05112198	-	-	●	●	●	●	-	●	●	●
	(6)/135	-		35-45	3,9x25	34/32	-	-	4	6	05112199	-	-	●	●	●	●	-	●	●	●
	(5)/135	-		35-45	3,9x25	34/32	-	-	4	6	05112257	-	-	●	●	●	●	-	●	●	●
	(4)/135	-		35-45	3,9x25	34/32	-	-	4	6	05112200	-	-	●	●	●	●	-	●	●	●
	8/135	CLIAQ		35-45	3,9x25	34	-	-	12	1	19477001	-	-	●	●	●	●	-	●	●	●
	7/135	CLIAQ		35-45	3,9x25	34	-	-	12	1	19477002	-	-	●	●	●	●	-	●	●	●
	8/155	CLIAQ		50-55	3,9x25	34	-	-	12	1	19477003	-	-	●	●	●	●	-	●	●	●
	7/155	CLIAQ		50-55	3,9x25	34	-	-	12	1	19497004	-	-	●	●	●	●	-	●	●	●
	8/165	CLIAQ		60-75	3,9x25	34	-	-	12	1	19477005	-	-	●	●	●	●	-	●	●	●
	7/165	CLIAQ		60-75	3,9x25	34	-	-	12	1	19477006	-	-	●	●	●	●	-	●	●	●
	8/175	CLIAQ		75-90	3,9x25	34	-	-	12	1	19477007	-	-	●	●	●	●	-	●	●	●
	7/175	CLIAQ		75-90	3,9x25	34	-	-	12	1	19477008	-	-	●	●	●	●	-	●	●	●

Descrizione_Description **1/2 ferro ancora**_1/2 anchor spindle

STEEL

Supporto_Support -

												MECHANISM 26
8/60	CLAQ CE	-	-	-	-	-	-	10	8	06727462		●
8/70	CLAQ CE	-	-	-	-	-	-	10	8	06727427		●
8/80	CLAQ CE	-	-	-	-	-	-	10	8	06727428		●
8/90	CLAQ CE	-	-	-	-	-	-	10	8	06727429		●
8/100	CLAQ CE	-	-	-	-	-	-	10	8	06727463		●
7/60	CLAQ CE	-	-	-	-	-	-	10	8	06727432		●
7/70	CLAQ CE	-	-	-	-	-	-	10	8	06727433		●
7/80	CLAQ CE	-	-	-	-	-	-	10	8	06727434		●
7/90	CLAQ CE	-	-	-	-	-	-	10	8	06727435		●
7/100	CLAQ CE	-	-	-	-	-	-	10	8	06727436		●

Descrizione_Description **LOFT/ROUND** pomolo fisso_fixed knob

ZAMAK

Supporto_Support **ø45X8mm**

											PLATINUM ABACO® 62	BLACK PEARL ABACO® 50	PLATINUM 03	BLACK PEARL 04	COPPER PEARL 5B	NOIR PEARL 08	COPPER SHINING 52	CRYSTAL SHINING 07	NATURAL GOLD 51	WHITE PEARL 02
7" or 8"	CLAQ	-	-	3,9x25	34	-	-	12	1	17077001	-	-	●	●	●	●	●	●	●	●
7" or 8"	CLAQ	-	-	3,9x25	34	-	-	12	1	19677001	-	-	●	●	●	●	●	●	●	●

Descrizione_Description **1/2 ferro per pomolo fisso**_1/2 fixed knob spindle

STEEL

Supporto_Support -

											MECHANISM 26
7/90	CLAQ CE	-	45-55	-	-	-	-	10	8	06727507	●
7/100	CLAQ CE	-	50-65	-	-	-	-	10	8	06727508	●
7/110	CLAQ CE	-	60-75	-	-	-	-	10	8	06727509	●
7/120	CLAQ CE	-	70-85	-	-	-	-	10	8	06727510	●
7/130	CLAQ CE	-	80-95	-	-	-	-	10	8	06727551	●
7/140	CLAQ CE	-	90-105	-	-	-	-	10	8	06727552	●
8/90	CLAQ CE	-	45-55	-	-	-	-	10	8	06727503	●
8/100	CLAQ CE	-	50-65	-	-	-	-	10	8	06727504	●
8/110	CLAQ CE	-	60-75	-	-	-	-	10	8	06727505	●
8/120	CLAQ CE	-	70-85	-	-	-	-	10	8	06727506	●
8/130	CLAQ CE	-	80-95	-	-	-	-	10	8	06727549	●
8/140	CLAQ CE	-	90-105	-	-	-	-	10	8	06727550	●

GIOIA

design Leo De Carlo

CE

BRASS **ZAMAK** ALU AISI 316 AISI 304

MANIGLIA PER PORTE INTERNE – SUPPORTO MINIMAL ø25x2mm_INTERNAL DOORS HANDLE – SUPPORT MINIMAL ø25x2mm

CARATTERISTICHE_FEATURES	**FISSAGGIO**_FIXING	**FINITURE**_FINISHES	**OPZIONI**_OPTIONS
CLAQ		1.000h 500h 500h 500h 500h PVD 500h 500h	EN-179

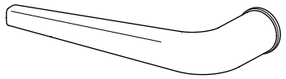

STANDARD TOILET SET

VERSIONI DISPONIBILI_AVAILABLE VERSIONS

CAPITOLATO_SPECIFICATION

ULTRACYCLE®

ULTRACYCLE® tested for over **1.000.000** cycles - **CLASS 4**

NORMA DIN EN 1906_DIN EN 1906 NORM

4 | 7 | - | 0 | 0 | 4 | 0 | A

Per una descrizione dettagliata di tutte le specifiche tecniche presenti nel prodotto, da impiegare nei capitolati o nelle offerte pubbliche, fate riferimento alla sezione CAPITOLATI_for a detailed description of all the technical informations contained in the product, to be used in the specifications or in public tenders, please refer to the SPECIFICATIONS section.

Descrizione_Description | GIOIA_design Leo De Carlo

ZAMAK

Supporto_Support | MINIMAL ø25x2mm

	■	+										PLATINUM ABACO* 62	BLACK PEARL ABACO* 50	PLATINUM PVD 03	BLACK PEARL PVD 04	COPPER PEARL PVD 5B	NOIR PEARL PVD 08	COPPER SHINING PVD 52	CRYSTAL SHINING PVD 07	NATURAL GOLD PVD 51	WHITE PEARL PVD 02
	8/135	CLAC		35-45	-	-	ø20	-	12	2	07546001	-	-	●	●	●	●	-	●	●	●
	7/135	CLAC		35-45	-	-	ø20	-	12	2	07546002	-	-	●	●	●	●	-	●	●	●
	-	CLAC		-	-	-	ø20	-	24	10	06548093	-	-	●	●	●	●	-	●	●	●
	-	-		-	-	-	ø20	-	24	10	06525146	-	-	●	●	●	●	-	●	●	●
	-	-		-	-	-	-	-	24	10	06525145	-	-	●	●	●	●	-	●	●	●
	(8)/135	-		35-45	-	-	ø20	-	4	6	05112233	-	-	●	●	●	●	-	●	●	●
	(7)/135	-		35-45	-	-	ø20	-	4	6	05112234	-	-	●	●	●	●	-	●	●	●
	(6)/135	-		35-45	-	-	ø20	-	4	6	05112235	-	-	●	●	●	●	-	●	●	●
	(5)/135	-		35-45	-	-	ø20	-	4	6	05112259	-	-	●	●	●	●	-	●	●	●
	(4)/135	-		35-45	-	-	ø20	-	4	6	05112260	-	-	●	●	●	●	-	●	●	●

GIOIA

design Leo De Carlo

CE

BRASS | **ZAMAK** | ALU | AISI 316 | AISI 304

MANIGLIA PER PORTE INTERNE – SUPPORTO EASYPIN ø55x2mm_INTERNAL DOORS HANDLE – SUPPORT EASYPIN ø55x2mm

CARATTERISTICHE_FEATURES	**FISSAGGIO**_FIXING	**FINITURE**_FINISHES	**OPZIONI**_OPTIONS
		1.000h | 500h | 500h | 500h | 500h | PVD 500h | 500h	EN-179

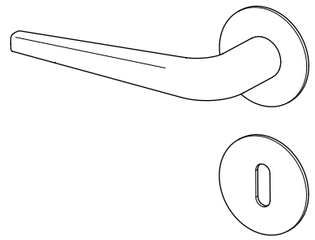

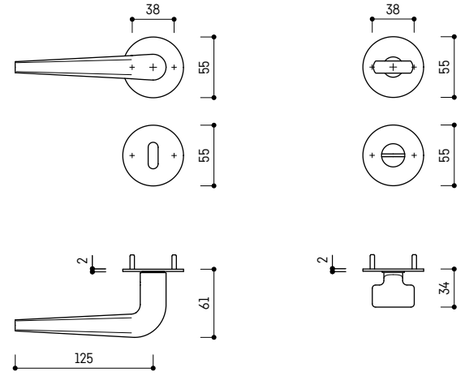

STANDARD | TOILET SET

VERSIONI DISPONIBILI_AVAILABLE VERSIONS

CAPITOLATO_SPECIFICATION

ULTRACYCLE®

ULTRACYCLE® tested for over **1.000.000** cycles - **CLASS 4**

NORMA DIN EN 1906_DIN EN 1906 NORM

4 | 7 | - | 0 | 0 | 4 | 0 | A

Per una descrizione dettagliata di tutte le specifiche tecniche presenti nel prodotto, da impiegare nei capitolati o nelle offerte pubbliche, fate riferimento alla sezione CAPITOLATI_for a detailed description of all the technical informations contained in the product, to be used in the specifications or in public tenders, please refer to the SPECIFICATIONS section.

Descrizione_Description | **GIOIA**_design Leo De Carlo

ZAMAK

Supporto_Support | **EASYPIN ø55x2mm**

	■	+										PLATINUM ABACO* 62	BLACK PEARL ABACO* 50	PLATINUM PVD 03	BLACK PEARL PVD 04	COPPER PEARL PVD 5B	NOIR PEARL PVD 08	COPPER SHINING PVD 52	CRYSTAL SHINING PVD 07	NATURAL GOLD PVD 51	WHITE PEARL PVD 02
	8/135	CLAQ		35-45	-	38	Ø7	-	12	2	07559001	-	-	●	●	●	●	-	●	●	●
	7/135	CLAQ		35-45	-	38	Ø7	-	12	2	07549002	-	-	●	●	●	●	-	●	●	●
	-	CLAQ		-	-	38	Ø7	-	24	10	06548077	-	-	●	●	●	●	-	●	●	●
	-	-		-	-	38	Ø7	-	24	10	06525121	-	-	●	●	●	●	-	●	●	●
	-	-		-	-	38	Ø7	-	24	10	06525120	-	-	●	●	●	●	-	●	●	●
	(8)/135	-		35-45	-	38	Ø7	-	4	6	05112251	-	-	●	●	●	●	-	●	●	●
	(7)/135	-		35-45	-	38	Ø7	-	4	6	05112261	-	-	●	●	●	●	-	●	●	●
	(6)/135	-		35-45	-	38	Ø7	-	4	6	05112262	-	-	●	●	●	●	-	●	●	●
	(5)/135	-		35-45	-	38	Ø7	-	4	6	05112263	-	-	●	●	●	●	-	●	●	●
	(4)/135	-		35-45	-	38	Ø7	-	4	6	05112264	-	-	●	●	●	●	-	●	●	●

GIOIA

design Leo De Carlo

CE

BRASS | **ZAMAK** | ALU | AISI 316 | AISI 304

MANIGLIA PER PORTE INTERNE – SUPPORTO 40x235x9mm_INTERNAL DOORS HANDLE – SUPPORT 40x235x9mm

CARATTERISTICHE_FEATURES	**FISSAGGIO**_FIXING	**FINITURE**_FINISHES	**OPZIONI**_OPTIONS
CLAQ		1.000h · 500h · 500h · 500h · 500h · PVD 500h · 500h	EN-179

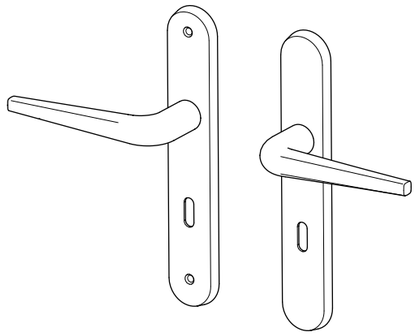

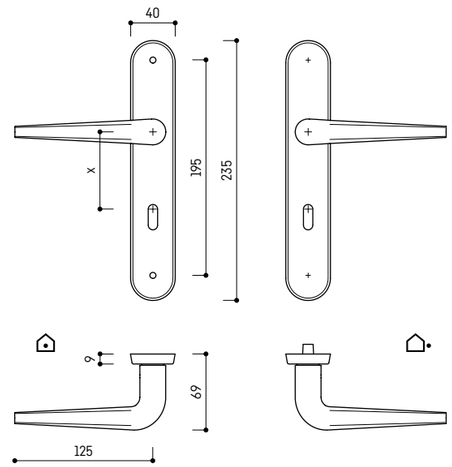

VERSIONI DISPONIBILI_AVAILABLE VERSIONS

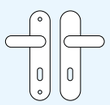
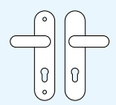
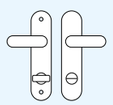

CAPITOLATO_SPECIFICATION

ULTRACYCLE®

ULTRACYCLE® tested for over **1.000.000** cycles - **CLASS 4**

NORMA DIN EN 1906_DIN EN 1906 NORM

4 | 7 | - | 0 | 0 | 4 | 0 | A

Per una descrizione dettagliata di tutte le specifiche tecniche presenti nel prodotto, da impiegare nei capitolati o nelle offerte pubbliche, fate riferimento alla sezione CAPITOLATI_for a detailed description of all the technical informations contained in the product, to be used in the specifications or in public tenders, please refer to the SPECIFICATIONS section.

Descrizione_Description | **GIOA**_design Leo De Carlo

ZAMAK

Supporto_Support | **40x235x9mm**

	■	+										PLATINUM ABACO* 62	BLACK PEARL ABACO* 50	PLATINUM PVD 03	BLACK PEARL PVD 04	COPPER PEARL PVD 5B	NOIR PEARL PVD 08	COPPER SHINING PVD 52	CRYSTAL SHINING PVD 07	NATURAL GOLD PVD 51	WHITE PEARL PVD 02
	8/135	CLAO		35-55	M4x75 SEC	195	Ø10	72	12	2	07501084	-	-	●	●	●	●	-	●	●	●
	7/135	CLAO		35-55	M4x75 SEC	195	Ø10	70	12	2	07501022	-	-	●	●	●	●	-	●	●	●
	8/135	CLAO		35-55	M4x75 SEC	195	Ø10	72	12	2	07501083	-	-	●	●	●	●	-	●	●	●
	7/135	CLAO		35-55	M4x75 SEC	195	Ø10	70	12	2	07501023	-	-	●	●	●	●	-	●	●	●
	8(8)/135	CLAO		35-55	M4x75 SEC	195	Ø10	78	12	2	07501085	-	-	●	●	●	●	-	●	●	●
	7(6)/135	CLAO		35-55	M4x75 SEC	195	Ø10	70	12	2	07501027	-	-	●	●	●	●	-	●	●	●

ARCO

design Leo De Carlo

CE

BRASS | **ZAMAK** | ALU | AISI 316 | AISI 304

MANIGLIA PER PORTE INTERNE – SUPPORTO ø52x10mm_INTERNAL DOORS HANDLE – SUPPORT ø52x10mm

CARATTERISTICHE_FEATURES					**FISSAGGIO**_FIXING						**FINITURE**_FINISHES							**OPZIONI**_OPTIONS			
	CLAO										P 1.000h	304 500h	316 500h	500h	500h	PVD 500h	500h		EN-179	REI-60	IP-65

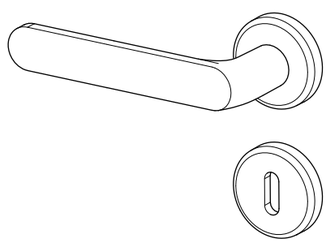

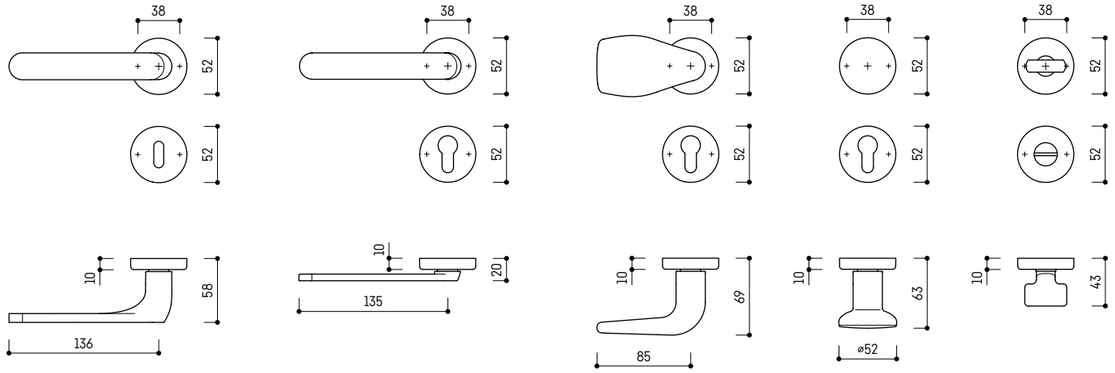

STANDARD | REDUCED | LOFT KNOB (FIXED) | ROUND KNOB (FIXED) | TOILET SET

VERSIONI DISPONIBILI_AVAILABLE VERSIONS

CAPITOLATO_SPECIFICATION

ULTRACYCLE®

ULTRACYCLE® tested for over **1.000.000** cycles - **CLASS 4**

NORMA DIN EN 1906_DIN EN 1906 NORM

4 | 7 | - | 0 | 0 | 4 | 0 | A

Per una descrizione dettagliata di tutte le specifiche tecniche presenti nel prodotto, da impiegare nei capitolati o nelle offerte pubbliche, fate riferimento alla sezione CAPITOLATI_for a detailed description of all the technical informations contained in the product, to be used in the specifications or in public tenders, please refer to the SPECIFICATIONS section.

Descrizione_Description ARCO_design Leo De Carlo

ZAMAK

Supporto_Support ø52x10mm

												PLATINUM ABACO* 62	BLACK PEARL ABACO* 50	PLATINUM 03	BLACK PEARL 04	COPPER PEARL 5B	NOIR PEARL 08	COPPER SHINING 52	CRYSTAL SHINING 07	NATURAL GOLD 51	WHITE PEARL 02
	8*		-	3,9x25 3,9x50	38	Ø8	-	12	2	20002001	●	●	●	●	●	●	●	●	●	●
	7*		-	3,9x25 3,9x50	38	Ø8	-	12	2	20002002	●	●	●	●	●	●	●	●	●	●
	8/135		35-45	3,9x50	38	Ø8	-	12	2	20002003	●	●	●	●	●	●	●	●	●	●
	8/135		35-45	3,9x25 3,9x50	38	Ø8	-	12	2	20002004	●	●	●	●	●	●	●	●	●	●
	7/135		35-45	3,9x25 3,9x50	38	Ø8	-	12	2	20002005	●	●	●	●	●	●	●	●	●	●
	8/135		35-65	3,9x25	38	Ø8	-	12	2	20002006	●	●	●	●	●	●	●	●	●	●
	7/135		35-65	3,9x25	38	Ø8	-	12	2	20002007	●	●	●	●	●	●	●	●	●	●
	8/135		35-45	3,9x50	38	Ø8	-	12	2	20002009	●	●	●	●	●	●	●	●	●	●
	8/135		35-45	3,9x25 3,9x50	38	Ø8	-	12	2	20002012	●	●	●	●	●	●	●	●	●	●
	7/135		35-45	3,9x25 3,9x50	38	Ø8	-	12	2	20002013	●	●	●	●	●	●	●	●	●	●
	8/135		35-45	3,9x25	38	-	-	12	2	20002016	●	●	●	●	●	●	●	●	●	●
	7/135		35-45	3,9x25	38	-	-	12	2	20002017	●	●	●	●	●	●	●	●	●	●
	8/135		35-45	3,9x50	38	Ø8	-	12	2	20002008	●	●	●	●	●	●	●	●	●	●
	8/160		60-90	3,9x25 3,9x75 3,9x95	38	Ø8	-	12	2	20002018	●	●	●	●	●	●	●	●	●	●
	8/135		35-45	3,9x25 3,9x50	38	Ø8	-	12	2	20002010	●	●	●	●	●	●	●	●	●	●
	8/160		60-90	3,9x25 3,9x75 3,9x95	38	Ø8	-	12	2	20002019	●	●	●	●	●	●	●	●	●	●
	7/135		35-45	3,9x25 3,9x50	38	Ø8	-	12	2	20002011	●	●	●	●	●	●	●	●	●	●
	7/160		60-90	3,9x25 3,9x75 3,9x95	38	Ø8	-	12	2	20002020	●	●	●	●	●	●	●	●	●	●
	8/135		35-65	3,9x25	38	Ø8	-	12	2	20002014	●	●	●	●	●	●	●	●	●	●
	8/160		60-90	3,9x25	38	Ø8	-	12	2	20002021	●	●	●	●	●	●	●	●	●	●
	7/135		35-65	3,9x25	38	Ø8	-	12	2	20002015	●	●	●	●	●	●	●	●	●	●
	7/160		60-90	3,9x25	38	Ø8	-	12	2	20002022	●	●	●	●	●	●	●	●	●	●
	(8)/135		35-45	3,9x50	38	Ø8	-	4	6	05112122	●	●	●	●	●	●	●	●	●	●

Descrizione_Description ARCO_design Leo De Carlo

ZAMAK

Supporto_Support ø52x10mm

											PLATINUM ABACO* 62	BLACK PEARL ABACO* 50	PLATINUM 03	BLACK PEARL 04	COPPER PEARL 5B	NOIR PEARL 08	COPPER SHINING 52	CRYSTAL SHINING 07	NATURAL GOLD 51	WHITE PEARL 02
	(8)/135		35-45	3,9x25 3,9x50	38	Ø8	-	4	6	05112110	●	●	●	●	●	●	●	●	●	●
	(7)/135		35-45	3,9x25 3,9x50	38	Ø8	-	4	6	05112111	●	●	●	●	●	●	●	●	●	●
	(6)/135		35-45	3,9x25 3,9x50	38	Ø8	-	4	6	05112112	●	●	●	●	●	●	●	●	●	●
	(5)/135		35-45	3,9x25 3,9x50	38	Ø8	-	4	6	05112254	●	●	●	●	●	●	●	●	●	●
	(4)/135		35-45	3,9x25 3,9x50	38	Ø8	-	4	6	05112113	●	●	●	●	●	●	●	●	●	●
	8/135		35-45	3,9x25 3,9x50	38	Ø8	-	12	1	19402005	●	●	●	●	●	●	●	●	●	●
	7/135		35-45	3,9x25 3,9x50	38	Ø8	-	12	1	19402006	●	●	●	●	●	●	●	●	●	●
	8/155		50-55	3,9x25 3,9x70	38	Ø8	-	12	1	19402007	●	●	●	●	●	●	●	●	●	●
	7/155		50-55	3,9x25 3,9x70	38	Ø8	-	12	1	19402008	●	●	●	●	●	●	●	●	●	●
	8/165		60-75	3,9x25 3,9x65 3,9x75 3,9x95	38	Ø8	-	12	1	19402009	●	●	●	●	●	●	●	●	●	●
	7/165		60-75	3,9x25 3,9x65 3,9x75 3,9x95	38	Ø8	-	12	1	19402010	●	●	●	●	●	●	●	●	●	●
	8/175		75-90	3,9x25 3,9x65 3,9x75 3,9x95	38	Ø8	-	12	1	19402011	●	●	●	●	●	●	●	●	●	●
	7/175		75-90	3,9x25 3,9x65 3,9x75 3,9x95	38	Ø8	-	12	1	19402012	●	●	●	●	●	●	●	●	●	●

Descrizione_Description 1/2 ferro ancora_1/2 anchor spindle

STEEL

Supporto_Support -

										MECHANISM 26
	8/60	-	-	-	-	-	-	10	8	06727462	●
	8/70	-	-	-	-	-	-	10	8	06727427	●
	8/80	-	-	-	-	-	-	10	8	06727428	●
	8/90	-	-	-	-	-	-	10	8	06727429	●
	8/100	-	-	-	-	-	-	10	8	06727463	●
	7/60	-	-	-	-	-	-	10	8	06727432	●
	7/70	-	-	-	-	-	-	10	8	06727433	●
	7/80	-	-	-	-	-	-	10	8	06727434	●
	7/90	-	-	-	-	-	-	10	8	06727435	●
	7/100	-	-	-	-	-	-	10	8	06727436	●

Descrizione_Description **LOFT/ROUND** pomolo fisso_fixed knob

ZAMAK

Supporto_Support **ø52x10mm**

												PLATINUM ABACO* 62	BLACK PEARL ABACO* 50	PLATINUM 03	BLACK PEARL 04	COPPER PEARL 5B	NOIR PEARL 08	COPPER SHINING 52	CRYSTAL SHINING 07	NATURAL GOLD 51	WHITE PEARL 02
	7* or 8*			-	3,9x25 3,9x50	38	Ø8	-	12	1	17002001	●	●	●	●	●	●	●	●	●	●
	7* or 8*			-	3,9x25 3,9x50	38	Ø8	-	12	1	19602001	●	●	●	●	●	●	●	●	●	●

Descrizione_Description **1/2 ferro per pomolo fisso**_1/2 fixed knob spindle

STEEL

Supporto_Support -

											MECHANISM 26
7/90		-	45-55	-	-	-	-	10	8	06727507	●
7/100		-	50-65	-	-	-	-	10	8	06727508	●
7/110		-	60-75	-	-	-	-	10	8	06727509	●
7/120		-	70-85	-	-	-	-	10	8	06727510	●
7/130		-	80-95	-	-	-	-	10	8	06727551	●
7/140		-	90-105	-	-	-	-	10	8	06727552	●
8/90		-	45-55	-	-	-	-	10	8	06727503	●
8/100		-	50-65	-	-	-	-	10	8	06727504	●
8/110		-	60-75	-	-	-	-	10	8	06727505	●
8/120		-	70-85	-	-	-	-	10	8	06727506	●
8/130		-	80-95	-	-	-	-	10	8	06727549	●
8/140		-	90-105	-	-	-	-	10	8	06727550	●

ARCO

design Leo De Carlo

CE

BRASS **ZAMAK** ALU AISI 316 AISI 304

MANIGLIA PER PORTE INTERNE – SUPPORTO ø45X8mm_INTERNAL DOORS HANDLE – SUPPORT ø45X8mm

CARATTERISTICHE_FEATURES					**FISSAGGIO**_FIXING						**FINITURE**_FINISHES							**OPZIONI**_OPTIONS			
	CLAO	R									P 1.000h	304 500h	316 500h	500h	500h	PVD 500h	500h		EN-179	REI-60	IP-65

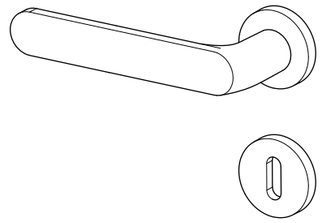

STANDARD REDUCED LOFT KNOB (FIXED) ROUND KNOB (FIXED) TOILET SET

VERSIONI DISPONIBILI_AVAILABLE VERSIONS

CAPITOLATO_SPECIFICATION

ULTRACYCLE®

ULTRACYCLE® tested for over **1.000.000** cycles - **CLASS 4**

NORMA DIN EN 1906_DIN EN 1906 NORM

4 | 7 | - | 0 | 0 | 4 | 0 | A

Per una descrizione dettagliata di tutte le specifiche tecniche presenti nel prodotto, da impiegare nei capitolati o nelle offerte pubbliche, fate riferimento alla sezione CAPITOLATI_for a detailed description of all the technical informations contained in the product, to be used in the specifications or in public tenders, please refer to the SPECIFICATIONS section.

Descrizione_Description **ARCO**_design Leo De Carlo

Supporto_Support **ø45X8mm**

	■	+										PLATINUM ABACO® 62	BLACK PEARL ABACO® 50	PLATINUM PVD 03	BLACK PEARL PVD 04	COPPER PEARL PVD 5B	NOIR PEARL PVD 08	COPPER SHINING PVD 52	CRYSTAL SHINING PVD 07	NATURAL GOLD PVD 51	WHITE PEARL PVD 02
	8*	CLAC		-	3,9x25	34/32	-	-	12	2	20077001	-	-	●	●	●	●	●	●	●	●
	7*	CLAC		-	3,9x25	34/32	-	-	12	2	20077002	-	-	●	●	●	●	●	●	●	●
	8/135	CLAC		35-45	3,9x25	34	-	-	12	2	20077003	-	-	●	●	●	●	●	●	●	●
	7/135	CLAC		35-45	3,9x25	34	-	-	12	2	20077004	-	-	●	●	●	●	●	●	●	●
	8/135	CLAC		35-45	3,9x25	34/32	-	-	12	2	20077007	-	-	●	●	●	●	●	●	●	●
	7/135	CLAC		35-45	3,9x25	34/32	-	-	12	2	20077008	-	-	●	●	●	●	●	●	●	●
	8/135	CLAC		35-65	3,9x25	34/32	-	-	12	2	20077005	-	-	●	●	●	●	●	●	●	●
	7/135	CLAC		35-65	3,9x25	34/32	-	-	12	2	20077006	-	-	●	●	●	●	●	●	●	●
	8/160	CLAC		60-90	3,9x25	34/32	-	-	12	2	20077009	-	-	●	●	●	●	●	●	●	●
	7/160	CLAC		60-90	3,9x25	34/32	-	-	12	2	20077010	-	-	●	●	●	●	●	●	●	●
	(8)/135	-		35-45	3,9x25	34/32	-	-	4	6	05112197	-	-	●	●	●	●	●	●	●	●
	(7)/135	-		35-45	3,9x25	34/32	-	-	4	6	05112198	-	-	●	●	●	●	●	●	●	●
	(6)/135	-		35-45	3,9x25	34/32	-	-	4	6	05112199	-	-	●	●	●	●	●	●	●	●
	(5)/135	-		35-45	3,9x25	34/32	-	-	4	6	05112257	-	-	●	●	●	●	●	●	●	●
	(4)/135	-		35-45	3,9x25	34/32	-	-	4	6	05112200	-	-	●	●	●	●	●	●	●	●
	8/135	CLAC		35-45	3,9x25	34	-	-	12	1	19477001	-	-	●	●	●	●	●	●	●	●
	7/135	CLAC		35-45	3,9x25	34	-	-	12	1	19477002	-	-	●	●	●	●	●	●	●	●
	8/155	CLAC		50-55	3,9x25	34	-	-	12	1	19477003	-	-	●	●	●	●	●	●	●	●
	7/155	CLAC		50-55	3,9x25	34	-	-	12	1	19497004	-	-	●	●	●	●	●	●	●	●
	8/165	CLAC		60-75	3,9x25	34	-	-	12	1	19477005	-	-	●	●	●	●	●	●	●	●
	7/165	CLAC		60-75	3,9x25	34	-	-	12	1	19477006	-	-	●	●	●	●	●	●	●	●
	8/175	CLAC		75-90	3,9x25	34	-	-	12	1	19477007	-	-	●	●	●	●	●	●	●	●
	7/175	CLAC		75-90	3,9x25	34	-	-	12	1	19477008	-	-	●	●	●	●	●	●	●	●

Descrizione_Description **1/2 ferro ancora**_1/2 anchor spindle

Supporto_Support **STEEL**

Supporto_Support -

	■	+										MECHANISM 26
	8/60	CLAC CC	-	-	-	-	-	-	10	8	06727462	●
	8/70	CLAC CC	-	-	-	-	-	-	10	8	06727427	●
	8/80	CLAC CC	-	-	-	-	-	-	10	8	06727428	●
	8/90	CLAC CC	-	-	-	-	-	-	10	8	06727429	●
	8/100	CLAC CC	-	-	-	-	-	-	10	8	06727463	●
	7/60	CLAC CC	-	-	-	-	-	-	10	8	06727432	●
	7/70	CLAC CC	-	-	-	-	-	-	10	8	06727433	●
	7/80	CLAC CC	-	-	-	-	-	-	10	8	06727434	●
	7/90	CLAC CC	-	-	-	-	-	-	10	8	06727435	●
	7/100	CLAC CC	-	-	-	-	-	-	10	8	06727436	●

Descrizione_Description **LOFT/ROUND** pomolo fisso_fixed knob

Supporto_Support **ø45X8mm**

	■	+										PLATINUM ABACO® 62	BLACK PEARL ABACO® 50	PLATINUM PVD 03	BLACK PEARL PVD 04	COPPER PEARL PVD 5B	NOIR PEARL PVD 08	COPPER SHINING PVD 52	CRYSTAL SHINING PVD 07	NATURAL GOLD PVD 51	WHITE PEARL PVD 02
	7* or 8*	CLAC		-	3,9x25	34	-	-	12	1	17077001	-	-	●	●	●	●	●	●	●	●
	7* or 8*	CLAC		-	3,9x25	34	-	-	12	1	19677001	-	-	●	●	●	●	●	●	●	●

Descrizione_Description **1/2 ferro per pomolo fisso**_1/2 fixed knob spindle

Supporto_Support **STEEL**

Supporto_Support -

	■	+										MECHANISM 26
	7/90	CLAC CC	-	45-55	-	-	-	-	10	8	06727507	●
	7/100	CLAC CC	-	50-65	-	-	-	-	10	8	06727508	●
	7/110	CLAC CC	-	60-75	-	-	-	-	10	8	06727509	●
	7/120	CLAC CC	-	70-85	-	-	-	-	10	8	06727510	●
	7/130	CLAC CC	-	80-95	-	-	-	-	10	8	06727551	●
	7/140	CLAC CC	-	90-105	-	-	-	-	10	8	06727552	●
	8/90	CLAC CC	-	45-55	-	-	-	-	10	8	06727503	●
	8/100	CLAC CC	-	50-65	-	-	-	-	10	8	06727504	●
	8/110	CLAC CC	-	60-75	-	-	-	-	10	8	06727505	●
	8/120	CLAC CC	-	70-85	-	-	-	-	10	8	06727506	●
	8/130	CLAC CC	-	80-95	-	-	-	-	10	8	06727549	●
	8/140	CLAC CC	-	90-105	-	-	-	-	10	8	06727550	●

ARCO

design Leo De Carlo

BRASS | **ZAMAK** | ALU | AISI 316 | AISI 304

MANIGLIA PER PORTE INTERNE – SUPPORTO MINIMAL ø25x2mm_INTERNAL DOORS HANDLE – SUPPORT MINIMAL ø25x2mm

CARATTERISTICHE_FEATURES	FISSAGGIO_FIXING	FINITURE_FINISHES	OPZIONI_OPTIONS
CLAQ		1.000h, 304 500h, 316 500h, 500h, 500h, PVD 500h, 500h	EN-179, REI-60, IP-65

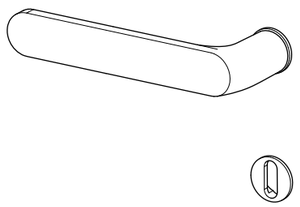

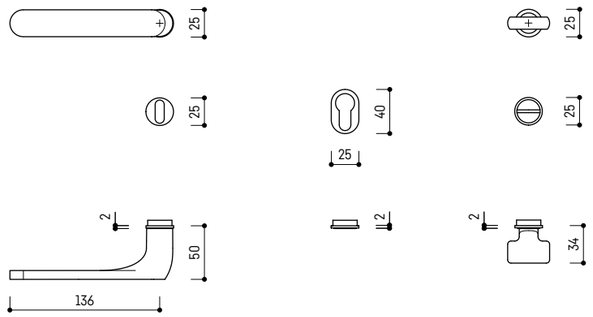

STANDARD

TOILET SET

VERSIONI DISPONIBILI_AVAILABLE VERSIONS

CAPITOLATO_SPECIFICATION

ULTRACYCLE®

ULTRACYCLE® tested for over **1.000.000** cycles - **CLASS 4**

NORMA DIN EN 1906_DIN EN 1906 NORM

4 | 7 | - | 0 | 0 | 4 | 0 | A

Per una descrizione dettagliata di tutte le specifiche tecniche presenti nel prodotto, da impiegare nei capitolati o nelle offerte pubbliche, fate riferimento alla sezione CAPITOLATI_for a detailed description of all the technical informations contained in the product, to be used in the specifications or in public tenders, please refer to the SPECIFICATIONS section.

Descrizione_Description: ARCO_design Leo De Carlo

ZAMAK

Supporto_Support: MINIMAL ø25x2mm

												PLATINUM ABACO® 62	BLACK PEARL ABACO® 50	PLATINUM PVD 03	BLACK PEARL PVD 04	COPPER PEARL PVD 5B	NOIR PEARL PVD 08	COPPER SHINING PVD 52	CRYSTAL SHINING PVD 07	NATURAL GOLD PVD 51	WHITE PEARL PVD 02
	8/135	CLAQ		35-45	-	-	ø20	-	12	2	20046001	-	-	●	●	●	●	●	●	●	●
	7/135	CLAQ		35-45	-	-	ø20	-	12	2	20046002	-	-	●	●	●	●	●	●	●	●
	-	CLAQ		-	-	-	ø20	-	24	10	06548093	-	-	●	●	●	●	●	●	●	●
	-	-		-	-	-	ø20	-	24	10	06525146	-	-	●	●	●	●	●	●	●	●
	-	-		-	-	-	-	-	24	10	06525145	-	-	●	●	●	●	●	●	●	●
	(8)/135	-		35-45	-	-	ø20	-	4	6	05112233	-	-	●	●	●	●	●	●	●	●
	(7)/135	-		35-45	-	-	ø20	-	4	6	05112234	-	-	●	●	●	●	●	●	●	●
	(6)/135	-		35-45	-	-	ø20	-	4	6	05112235	-	-	●	●	●	●	●	●	●	●
	(5)/135	-		35-45	-	-	ø20	-	4	6	05112259	-	-	●	●	●	●	●	●	●	●
	(4)/135	-		35-45	-	-	ø20	-	4	6	05112260	-	-	●	●	●	●	●	●	●	●

ARCO

design Leo De Carlo

CE

BRASS | **ZAMAK** | ALU | AISI 316 | AISI 304

MANIGLIA PER PORTE INTERNE – SUPPORTO EASYPIN ø55x2mm _INTERNAL DOORS HANDLE – SUPPORT EASYPIN ø55x2mm

CARATTERISTICHE_FEATURES	**FISSAGGIO**_FIXING	**FINITURE**_FINISHES	**OPZIONI**_OPTIONS

1.000h	500h	500h	500h	500h	500h	500h	EN-179	REI-60	IP-65

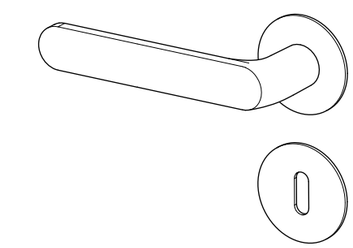

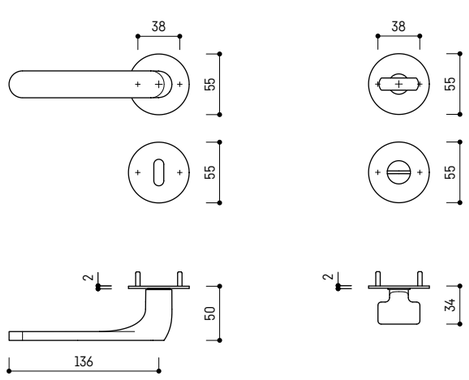

STANDARD TOILET SET

VERSIONI DISPONIBILI_AVAILABLE VERSIONS

CAPITOLATO_SPECIFICATION

ULTRACYCLE®

ULTRACYCLE® tested for over **1.000.000** cycles - **CLASS 4**

NORMA DIN EN 1906_DIN EN 1906 NORM

4 | 7 | - | 0 | 0 | 4 | 0 | A

Per una descrizione dettagliata di tutte le specifiche tecniche presenti nel prodotto, da impiegare nei capitolati o nelle offerte pubbliche, fate riferimento alla sezione CAPITOLATI_for a detailed description of all the technical informations contained in the product, to be used in the specifications or in public tenders, please refer to the SPECIFICATIONS section.

Descrizione_Description: ARCO_design Leo De Carlo

ZAMAK

Supporto_Support: EASYPIN ø55x2mm

■	+			X							PLATINUM ABACO* 62	BLACK PEARL ABACO* 50	PLATINUM 03	BLACK PEARL 04	COPPER PEARL 5B	NOIR PEARL 08	COPPER SHINING 52	CRYSTAL SHINING 07	NATURAL GOLD 51	WHITE PEARL 02
8/135	CLIAQ		35-45	-	38	Ø7	-	12	2	20059001	-	-	●	●	●	●	●	●	●	●
7/135	CLIAQ		35-45	-	38	Ø7	-	12	2	20059002	-	-	●	●	●	●	●	●	●	●
-	CLIAQ		-	-	38	Ø7	-	24	10	06548077	-	-	●	●	●	●	●	●	●	●
-	-		-	-	38	Ø7	-	24	10	06525121	-	-	●	●	●	●	●	●	●	●
-	-		-	-	38	Ø7	-	24	10	06525120	-	-	●	●	●	●	●	●	●	●
(8)/135	-		35-45	-	38	Ø7	-	4	6	05112251	-	-	●	●	●	●	●	●	●	●
(7)/135	-		35-45	-	38	Ø7	-	4	6	05112261	-	-	●	●	●	●	●	●	●	●
(6)/135	-		35-45	-	38	Ø7	-	4	6	05112262	-	-	●	●	●	●	●	●	●	●
(5)/135	-		35-45	-	38	Ø7	-	4	6	05112263	-	-	●	●	●	●	●	●	●	●
(4)/135	-		35-45	-	38	Ø7	-	4	6	05112264	-	-	●	●	●	●	●	●	●	●

ARCO

design Leo De Carlo

BRASS | **ZAMAK** | ALU | AISI 316 | AISI 304

MANIGLIA PER PORTE INTERNE – SUPPORTO 40x235x9mm_INTERNAL DOORS HANDLE – SUPPORT 40x235x9mm

CARATTERISTICHE_FEATURES	**FISSAGGIO**_FIXING	**FINITURE**_FINISHES	**OPZIONI**_OPTIONS
CLAQ		1.000h · 304 500h · 316 500h · 500h · 500h · **PVD 500h** · **500h**	**EN-179**

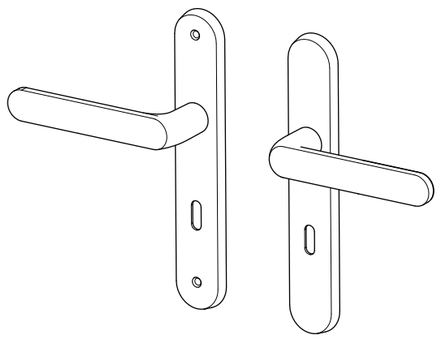

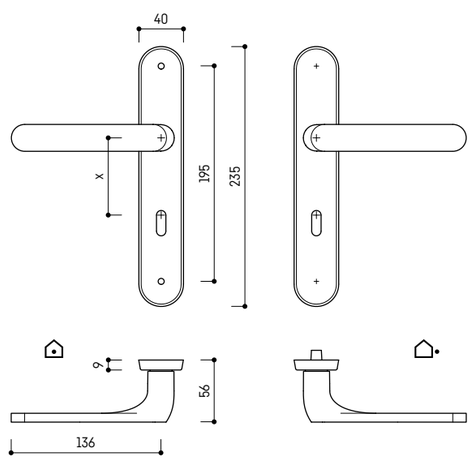

VERSIONI DISPONIBILI_AVAILABLE VERSIONS

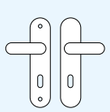
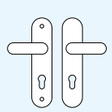
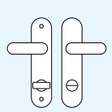

CAPITOLATO_SPECIFICATION

ULTRACYCLE®

ULTRACYCLE® tested for over
1.000.000 cycles - **CLASS 4**

NORMA DIN EN 1906_DIN EN 1906 NORM

4 | 7 | - | 0 | 0 | 4 | 0 | A

Per una descrizione dettagliata di tutte le specifiche tecniche presenti nel prodotto, da impiegare nei capitolati o nelle offerte pubbliche, fate riferimento alla sezione CAPITOLATI_for a detailed description of all the technical informations contained in the product, to be used in the specifications or in public tenders, please refer to the SPECIFICATIONS section.

Descrizione_Description: ARCO_design Leo De Carlo

ZAMAK

Supporto_Support: 40x235x9mm

	■	+			X							PLATINUM ABACO® 62	BLACK PEARL ABACO® 50	PLATINUM PVD 03	BLACK PEARL PVD 04	COPPER PEARL PVD 5B	NOIR PEARL PVD 08	COPPER SHINING PVD 52	CRYSTAL SHINING PVD 07	NATURAL GOLD PVD 51	WHITE PEARL PVD 02
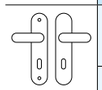	8/135	CLAQ		35-55	M4x75 SEC	195	Ø10	72	12	2	20001002	-	-	●	●	●	●	-	●	●	●
	7/135	CLAQ		35-55	M4x75 SEC	195	Ø10	70	12	2	20001005	-	-	●	●	●	●	-	●	●	●
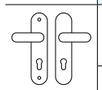	8/135	CLAQ		35-55	M4x75 SEC	195	Ø10	72	12	2	20001001	-	-	●	●	●	●	-	●	●	●
	7/135	CLAQ		35-55	M4x75 SEC	195	Ø10	70	12	2	20001004	-	-	●	●	●	●	-	●	●	●
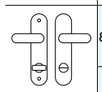	8(8)/135	CLAQ		35-55	M4x75 SEC	195	Ø10	78	12	2	20001003	-	-	●	●	●	●	-	●	●	●
	7(6)/135	CLAQ		35-55	M4x75 SEC	195	Ø10	70	12	2	20001006	-	-	●	●	●	●	-	●	●	●

ARCO

design Leo De Carlo

BRASS · ZAMAK · **ALU** · AISI 316 · AISI 304

MANIGLIA PER PORTE INTERNE – SUPPORTO ø52x10mm_INTERNAL DOORS HANDLE – SUPPORT ø52x10mm

CARATTERISTICHE_FEATURES	**FISSAGGIO**_FIXING	**FINITURE**_FINISHES	**OPZIONI**_OPTIONS
		1.000h · 500h · 500h · 500h · 500h · 500h · 500h	EN-179 · REI-60 · IP-65

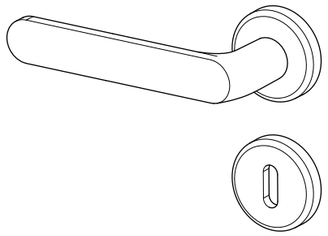

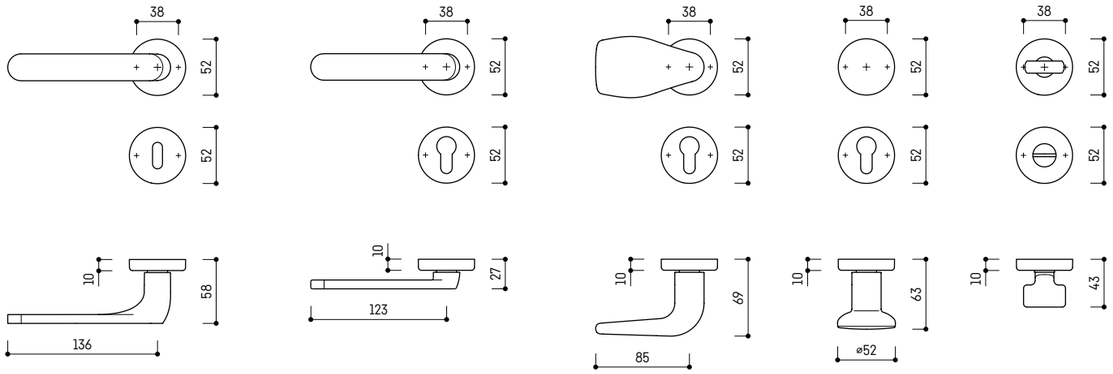

STANDARD · REDUCED · LOFT KNOB (FIXED) · ROUND KNOB (FIXED) · TOILET SET

VERSIONI DISPONIBILI_AVAILABLE VERSIONS

CAPITOLATO_SPECIFICATION

ULTRACYCLE®

ULTRACYCLE® tested for over **1.000.000** cycles - **CLASS 4**

NORMA DIN EN 1906_DIN EN 1906 NORM

4 | 7 | - | 0 | 0 | 4 | 0 | A

Per una descrizione dettagliata di tutte le specifiche tecniche presenti nel prodotto, da impiegare nei capitolati o nelle offerte pubbliche, fate riferimento alla sezione CAPITOLATI_for a detailed description of all the technical informations contained in the product, to be used in the specifications or in public tenders, please refer to the SPECIFICATIONS section.

Descrizione_Description: ARCO_design Leo De Carlo

ALU

Supporto_Support: ø52x10mm

	■	+	x									F1 97	F9 4B	ENOX 77	BLACK RAL 9005 33	WHITE SIGNAL RAL 9016 22	PURE WHITE RAL 9010 67	WHITE BIO* 88	NOIR BIO* 89	ANTHRACITE RAL 7016 78	LIGHT GREY RAL 7035 82	CLAY BROWN RAL 8003 80	IVORY RAL 1015 81	DARK BROWN RAL 8017 96
	8*		-	3,9x50	38	Ø8	-	12	2	19902001	●	●	●	●	●	●	●	●	●	●	-	●	●
	8*		-	3,9x25 3,9x50	38	Ø8	-	12	2	19902002	●	●	●	●	●	●	●	●	●	●	-	●	●
	7*		-	3,9x25 3,9x50	38	Ø8	-	12	2	19902003	●	●	●	●	●	●	●	●	●	●	-	●	●
	8*		-	3,9x25	38	Ø8	-	12	2	19902004	●	●	●	●	●	●	●	●	●	●	-	●	●
	7*		-	3,9x25	38	Ø8	-	12	2	19902005	●	●	●	●	●	●	●	●	●	●	-	●	●
	8/135		35-45	3,9x50	38	Ø8	-	12	2	19902006	●	●	●	●	●	●	●	●	●	●	-	●	●
	8/135		35-45	3,9x25 3,9x50	38	Ø8	-	12	2	19902007	●	●	●	●	●	●	●	●	●	●	-	●	●
	7/135		35-45	3,9x25 3,9x50	38	Ø8	-	12	2	19902008	●	●	●	●	●	●	●	●	●	●	-	●	●
	8/135		35-65	3,9x25 3,9x50	38	Ø8	-	12	2	19902009	●	●	●	●	●	●	●	●	●	●	-	●	●
	7/135		35-65	3,9x25 3,9x50	38	Ø8	-	12	2	19902010	●	●	●	●	●	●	●	●	●	●	-	●	●
	8/135		35-45	3,9x50	38	Ø8	-	12	2	19902012	●	●	●	●	●	●	●	●	●	●	-	●	●
	8/135		35-45	3,9x25 3,9x50	38	Ø8	-	12	2	19902015	●	●	●	●	●	●	●	●	●	●	-	●	●
	7/135		35-45	3,9x25 3,9x50	38	Ø8	-	12	2	19902016	●	●	●	●	●	●	●	●	●	●	-	●	●
	8/135		35-45	3,9x25	38	-	-	12	2	19902019	●	●	●	●	●	●	●	●	●	●	-	●	●
	7/135		35-45	3,9x25	38	-	-	12	2	19902020	●	●	●	●	●	●	●	●	●	●	-	●	●
	8/135		35-45	3,9x50	38	Ø8	-	12	2	19902011	●	●	●	●	●	●	●	●	●	●	-	●	●
	8/135		35-45	3,9x25 3,9x50	38	Ø8	-	12	2	19902013	●	●	●	●	●	●	●	●	●	●	-	●	●
	7/135		35-45	3,9x25 3,9x50	38	Ø8	-	12	2	19902014	●	●	●	●	●	●	●	●	●	●	-	●	●
	8/135	90°	35-45	3,9x25 3,9x50	38	Ø8	-	12	2	19998009	●	●	●	●	●	●	●	●	●	●	-	●	●
	7/135	90°	35-45	3,9x25 3,9x50	38	Ø8	-	12	2	19998010	●	●	●	●	●	●	●	●	●	●	-	●	●
	8/135		35-45	3,9x25	38	-	-	12	2	19902017	●	●	●	●	●	●	●	●	●	●	-	●	●
	7/135		35-45	3,9x25	38	-	-	12	2	19902018	●	●	●	●	●	●	●	●	●	●	-	●	●
	8/135	90°	35-45	3,9x25	38	-	-	12	2	19998011	●	●	●	●	●	●	●	●	●	●	-	●	●

Descrizione_Description ARCO_design Leo De Carlo

ALU

Supporto_Support ø52x10mm

■	+			X							F1 97	F9 4B	ENOX 77	BLACK RAL 9005 33	WHITE SIGNAL RAL 9016 22	PURE WHITE RAL 9010 67	WHITE BIOV® 88	NOIR BIOV® 89	ANTHRACITE RAL 7016 78	LIGHT GREY RAL 7035 82	CLAY BROWN RAL 8003 80	IVORY RAL 1015 81	DARK BROWN RAL 8707 96
7/135	90°		35-45	3,9x25	38	-	-	12	2	19998012	●	●	●	●	●	●	●	●	●	●	-	●	●
8/160			60-90	3,9x65 3,9x75 3,9x95	38	Ø8	-	12	2	19902021	●	●	●	●	●	●	●	●	●	●	-	●	●
8/160			60-90	3,9x25 3,9x65 3,9x75 3,9x95	38	Ø8	-	12	2	19902022	●	●	●	●	●	●	●	●	●	●	-	●	●
7/160			60-90	3,9x25 3,9x65 3,9x75 3,9x95	38	Ø8	-	12	2	19902023	●	●	●	●	●	●	●	●	●	●	-	●	●
8/160	90°		60-90	3,9x25 3,9x65 3,9x75 3,9x95	38	Ø8	-	12	2	19998013	●	●	●	●	●	●	●	●	●	●	-	●	●
7/160	90°		60-90	3,9x25 3,9x65 3,9x75 3,9x95	38	Ø8	-	12	2	19998014	●	●	●	●	●	●	●	●	●	●	-	●	●
8/160			60-90	3,9x25	38	-	-	12	2	19902024	●	●	●	●	●	●	●	●	●	●	-	●	●
7/160			60-90	3,9x25	38	-	-	12	2	19902025	●	●	●	●	●	●	●	●	●	●	-	●	●
8/160	90°		60-90	3,9x25	38	-	-	12	2	19998015	●	●	●	●	●	●	●	●	●	●	-	●	●
7/160	90°		60-90	3,9x25	38	-	-	12	2	19998016	●	●	●	●	●	●	●	●	●	●	-	●	●
(8)/135			35-45	3,9x50	38	Ø8	-	4	6	05112077	●	●	●	●	●	●	●	●	●	●	-	●	●
(8)/135			35-45	3,9x25 3,9x50	38	Ø8	-	4	6	05112065	●	●	●	●	●	●	●	●	●	●	-	●	●
(7)/135			35-45	3,9x25 3,9x50	38	Ø8	-	4	6	05112066	●	●	●	●	●	●	●	●	●	●	-	●	●
(6)/135			35-45	3,9x25 3,9x50	38	Ø8	-	4	6	05112067	●	●	●	●	●	●	●	●	●	●	-	●	●
(5)/135			35-45	3,9x25 3,9x50	38	Ø8	-	4	6	05112255	●	●	●	●	●	●	●	●	●	●	-	●	●
(4)/135			35-45	3,9x25 3,9x50	38	Ø8	-	4	6	05112068	●	●	●	●	●	●	●	●	●	●	-	●	●
(8)/135			35-45	3,9x50	38	Ø8	-	4	6	05112092	●	●	●	●	●	●	●	●	●	●	-	●	●
(8)/135			35-45	3,9x25 3,9x50	38	Ø8	-	4	6	05112080	●	●	●	●	●	●	●	●	●	●	-	●	●
(7)/135			35-45	3,9x25 3,9x50	38	Ø8	-	4	6	05112081	●	●	●	●	●	●	●	●	●	●	-	●	●
(6)/135			35-45	3,9x25 3,9x50	38	Ø8	-	4	6	05112082	●	●	●	●	●	●	●	●	●	●	-	●	●
(5)/135			35-45	3,9x25 3,9x50	38	Ø8	-	4	6	05112256	●	●	●	●	●	●	●	●	●	●	-	●	●
(4)/135			35-45	3,9x25 3,9x50	38	Ø8	-	4	6	05112083	●	●	●	●	●	●	●	●	●	●	-	●	●
8/135			35-45	3,9x25 3,9x50	38	Ø8	-	12	1	17902005	●	●	●	●	●	●	●	●	●	●	-	●	●

Descrizione_Description O_design Leo De Carlo

ALU

Supporto_Support ø52x10mm

■	+			X							F1 97	F9 4B	ENOX 77	BLACK RAL 9005 33	WHITE SIGNAL RAL 9016 22	PURE WHITE RAL 9010 67	WHITE BIOV® 88	NOIR BIOV® 89	ANTHRACITE RAL 7016 78	LIGHT GREY RAL 7035 82	CLAY BROWN RAL 8003 80	IVORY RAL 1015 81	DARK BROWN RAL 8707 96
7/135			35-45	3,9x25 3,9x50	38	Ø8	-	12	1	17902006	●	●	●	●	●	●	●	●	●	●	-	●	●
8/155			50-55	3,9x25 3,9x70	38	Ø8	-	12	1	17902007	●	●	●	●	●	●	●	●	●	●	-	●	●
7/155			50-55	3,9x25 3,9x70	38	Ø8	-	12	1	17902008	●	●	●	●	●	●	●	●	●	●	-	●	●
8/165			60-75	3,9x25 3,9x65 3,9x75 3,9x95	38	Ø8	-	12	1	17902009	●	●	●	●	●	●	●	●	●	●	-	●	●
7/165			60-75	3,9x25 3,9x65 3,9x75 3,9x95	38	Ø8	-	12	1	17902010	●	●	●	●	●	●	●	●	●	●	-	●	●
8/175			75-90	3,9x25 3,9x65 3,9x75 3,9x95	38	Ø8	-	12	1	17902011	●	●	●	●	●	●	●	●	●	●	-	●	●
7/175			75-90	3,9x25 3,9x65 3,9x75 3,9x95	38	Ø8	-	12	1	17902012	●	●	●	●	●	●	●	●	●	●	-	●	●

Descrizione_Description 1/2 ferro ancora_1/2 anchor spindle

STEEL

Supporto_Support -

■	+			X							MECHANISM 26
8/60		-	-	-	-	-	-	10	8	06727462	●
8/70		-	-	-	-	-	-	10	8	06727427	●
8/80		-	-	-	-	-	-	10	8	06727428	●
8/90		-	-	-	-	-	-	10	8	06727429	●
8/100		-	-	-	-	-	-	10	8	06727463	●
7/60		-	-	-	-	-	-	10	8	06727432	●
7/70		-	-	-	-	-	-	10	8	06727433	●
7/80		-	-	-	-	-	-	10	8	06727434	●
7/90		-	-	-	-	-	-	10	8	06727435	●
7/100		-	-	-	-	-	-	10	8	06727436	●

Descrizione_Description — **LOFT/ROUND** pomolo fisso_fixed knob

ALU

Supporto_Support — ø52x10mm

	■	+																					
													FI 97	FP 48	ENOX 77	BLACK RAL 9005 33	WHITE SIGNAL RAL 9016 22	PURE WHITE RAL 9010 67	WHITE BIOV* 88	NOIR BIOV* 89	ANTHRACITE RAL 7024 78	LIGHT GREY RAL 7035 82	CLAY BROWN RAL 8003 80	IVORY RAL 1015 81	DARK BROWN RAL 8707 96
⬭	7* or 8*	CLAO		-	3,9x25 3,9x50	38	Ø8	-	12	1	19502001	●	●	●	●	●	●	●	●	●	●	-	●	●
○	7* or 8*	CLAO		-	3,9x25 3,9x50	38	Ø8	-	12	1	19702001	●	●	●	●	●	●	●	●	●	●	-	●	●

Descrizione_Description — **1/2 ferro per pomolo fisso**_1/2 fixed knob spindle

STEEL

Supporto_Support — -

	■	+									
											MECHANISM 26
▬	7/90	CLAO	-	45-55	-	-	-	-	10	8	06727507 ●
	7/100	CLAO	-	50-65	-	-	-	-	10	8	06727508 ●
	7/110	CLAO	-	60-75	-	-	-	-	10	8	06727509 ●
	7/120	CLAO	-	70-85	-	-	-	-	10	8	06727510 ●
	7/130	CLAO	-	80-95	-	-	-	-	10	8	06727551 ●
	7/140	CLAO	-	90-105	-	-	-	-	10	8	06727552 ●
	8/90	CLAO	-	45-55	-	-	-	-	10	8	06727503 ●
	8/100	CLAO	-	50-65	-	-	-	-	10	8	06727504 ●
	8/110	CLAO	-	60-75	-	-	-	-	10	8	06727505 ●
	8/120	CLAO	-	70-85	-	-	-	-	10	8	06727506 ●
	8/130	CLAO	-	80-95	-	-	-	-	10	8	06727549 ●
	8/140	CLAO	-	90-105	-	-	-	-	10	8	06727550 ●

ARCO

design Leo De Carlo

CE

BRASS · ZAMAK · **ALU** · AISI 316 · AISI 304

MANIGLIA PER PORTE INTERNE – SUPPORTO ø45x8mm_INTERNAL DOORS HANDLE – SUPPORT ø45x8mm

CARATTERISTICHE_FEATURES	**FISSAGGIO**_FIXING	**FINITURE**_FINISHES									**OPZIONI**_OPTIONS			
∞ · CLAO · R · ⟋ · ⟋	○ · ⊖ · ⊟ · ⊐ · ⊏ · ⊐	P	304	316			PVD						
		1.000h	500h	500h	500h	500h	500h	500h			EN-179	REI-60	IP-65

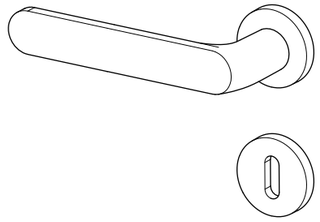

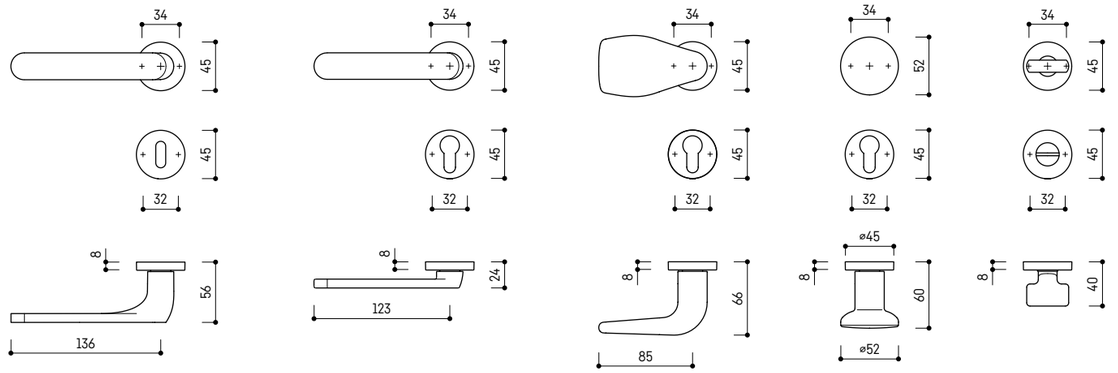

STANDARD · REDUCED · LOFT KNOB (FIXED) · ROUND KNOB (FIXED) · TOILET SET

VERSIONI DISPONIBILI_AVAILABLE VERSIONS

CAPITOLATO_SPECIFICATION — ULTRACYCLE®

ULTRACYCLE® tested for over **1.000.000** cycles - **CLASS 4**

NORMA DIN EN 1906_DIN EN 1906 NORM

4 | 7 | - | 0 | 0 | 4 | 0 | A

Per una descrizione dettagliata di tutte le specifiche tecniche presenti nel prodotto, da impiegare nei capitolati o nelle offerte pubbliche, fate riferimento alla sezione CAPITOLATI_for a detailed description of all the technical informations contained in the product, to be used in the specifications or in public tenders, please refer to the SPECIFICATIONS section.

Descrizione_Description **ARCO**_design Leo De Carlo

ALU

Supporto_Support **ø45x8mm**

■	+										F1 97	F9 4B	ENOX 77	BLACK RAL 9005 33	WHITE SIGNAL RAL 9016 22	PURE WHITE RAL 9010 67	WHITE BIOV* 88	NOIR BIOV* 89	ANTHRACITE RAL 7024 78	LIGHT GREY RAL 7035 82	CLAY BROWN RAL 8003 80	IVORY RAL 1015 81	DARK BROWN RAL 8707 96
8*		-	3,9x25	34/32	-	-	12	2	19977001	●	●	●	●	●	●	●	●	●	●	-	●	●
7*		-	3,9x25	34/32	-	-	12	2	19977002	●	●	●	●	●	●	●	●	●	●	-	●	●
8/135		35-45	3,9x25	34	-	-	12	2	19977003	●	●	●	●	●	●	●	●	●	●	-	●	●
7/135		35-45	3,9x25	34	-	-	12	2	19977004	●	●	●	●	●	●	●	●	●	●	-	●	●
8/135		35-45	3,9x25	34/32	-	-	12	2	19977007	●	●	●	●	●	●	●	●	●	●	-	●	●
7/135		35-45	3,9x25	34/32	-	-	12	2	19977008	●	●	●	●	●	●	●	●	●	●	-	●	●
8/135		35-65	3,9x25	34/32	-	-	12	2	19977005	●	●	●	●	●	●	●	●	●	●	-	●	●
7/135		35-65	3,9x25	34/32	-	-	12	2	19977006	●	●	●	●	●	●	●	●	●	●	-	●	●
8/160		60-90	3,9x25	34/32	-	-	12	2	19977009	●	●	●	●	●	●	●	●	●	●	-	●	●
7/160		60-90	3,9x25	34/32	-	-	12	2	19977010	●	●	●	●	●	●	●	●	●	●	-	●	●
(8)/135	-	35-45	3,9x25	34/32	-	-	4	6	05112185	●	●	●	●	●	●	●	●	●	●	-	●	●
(7)/135	-	35-45	3,9x25	34/32	-	-	4	6	05112186	●	●	●	●	●	●	●	●	●	●	-	●	●
(6)/135	-	35-45	3,9x25	34/32	-	-	4	6	05112187	●	●	●	●	●	●	●	●	●	●	-	●	●
(5)/135	-	35-45	3,9x25	34/32	-	-	4	6	05112258	●	●	●	●	●	●	●	●	●	●	-	●	●
(4)/135	-	35-45	3,9x25	34/32	-	-	4	6	05112188	●	●	●	●	●	●	●	●	●	●	-	●	●
8/135		35-45	3,9x25	34	-	-	12	1	17977001	●	●	●	●	●	●	●	●	●	●	-	●	●
7/135		35-45	3,9x25	34	-	-	12	1	17977002	●	●	●	●	●	●	●	●	●	●	-	●	●
8/155		50-55	3,9x25	34	-	-	12	1	17977003	●	●	●	●	●	●	●	●	●	●	-	●	●
7/155		50-55	3,9x25	34	-	-	12	1	17977004	●	●	●	●	●	●	●	●	●	●	-	●	●
8/165		60-75	3,9x25	34	-	-	12	1	17977005	●	●	●	●	●	●	●	●	●	●	-	●	●
7/165		60-75	3,9x25	34	-	-	12	1	17977006	●	●	●	●	●	●	●	●	●	●	-	●	●
8/175		75-90	3,9x25	34	-	-	12	1	17977007	●	●	●	●	●	●	●	●	●	●	-	●	●
7/175		75-90	3,9x25	34	-	-	12	1	17977008	●	●	●	●	●	●	●	●	●	●	-	●	●

Descrizione_Description **1/2 ferro ancora**_1/2 anchor spindle

STEEL

Supporto_Support -

■	+										MECHANISM 26
8/60		-	-	-	-	-	-	10	8	06727462	●
8/70		-	-	-	-	-	-	10	8	06727427	●
8/80		-	-	-	-	-	-	10	8	06727428	●
8/90		-	-	-	-	-	-	10	8	06727429	●
8/100		-	-	-	-	-	-	10	8	06727463	●
7/60		-	-	-	-	-	-	10	8	06727432	●
7/70		-	-	-	-	-	-	10	8	06727433	●
7/80		-	-	-	-	-	-	10	8	06727434	●
7/90		-	-	-	-	-	-	10	8	06727435	●
7/100		-	-	-	-	-	-	10	8	06727436	●

Descrizione_Description **LOFT/ROUND** pomolo fisso_fixed knob

ALU

Supporto_Support **ø45x8mm**

■	+										F1 97	F9 4B	ENOX 77	BLACK RAL 9005 33	WHITE SIGNAL RAL 9016 22	PURE WHITE RAL 9010 67	WHITE BIOV* 88	NOIR BIOV* 89	ANTHRACITE RAL 7024 78	LIGHT GREY RAL 7035 82	CLAY BROWN RAL 8003 80	IVORY RAL 1015 81	DARK BROWN RAL 8707 96
7* or 8*		-	-	3,9x25	34	-	-	12	1	19577001	●	●	●	●	●	●	●	●	●	●	-	●	●
7* or 8*		-	-	3,9x25	34	-	-	12	1	19777001	●	●	●	●	●	●	●	●	●	●	-	●	●

Descrizione_Description **1/2 ferro per pomolo fisso**_1/2 fixed knob spindle

STEEL

Supporto_Support -

■	+										MECHANISM 26
7/90		-	45-55	-	-	-	-	10	8	06727507	●
7/100		-	50-65	-	-	-	-	10	8	06727508	●
7/110		-	60-75	-	-	-	-	10	8	06727509	●
7/120		-	70-85	-	-	-	-	10	8	06727510	●
7/130		-	80-95	-	-	-	-	10	8	06727551	●
7/140		-	90-105	-	-	-	-	10	8	06727552	●
8/90		-	45-55	-	-	-	-	10	8	06727503	●
8/100		-	50-65	-	-	-	-	10	8	06727504	●
8/110		-	60-75	-	-	-	-	10	8	06727505	●
8/120		-	70-85	-	-	-	-	10	8	06727506	●
8/130		-	80-95	-	-	-	-	10	8	06727549	●
8/140		-	90-105	-	-	-	-	10	8	06727550	●

ARCO

design Leo De Carlo

BRASS ZAMAK **ALU** AISI 316 AISI 304

MANIGLIA PER PORTE INTERNE – SUPPORTO MINIMAL ø25x2mm_INTERNAL DOORS HANDLE – SUPPORT MINIMAL ø25x2mm

CARATTERISTICHE_FEATURES	FISSAGGIO_FIXING	FINITURE_FINISHES	OPZIONI_OPTIONS
CO, CLAG, R		P 1.000h, 304 500h, 316 500h, 500h, 500h, PVD 500h, 500h	EN-179, REI-60, IP-65

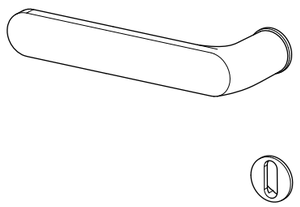

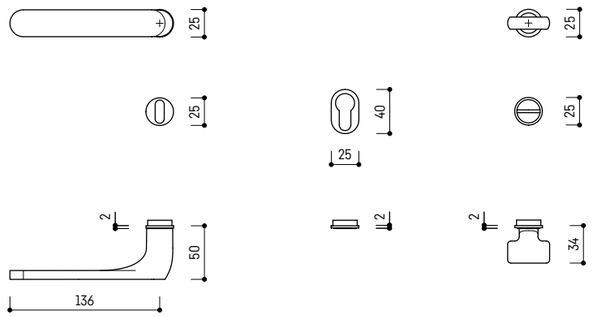

STANDARD

TOILET SET

VERSIONI DISPONIBILI_AVAILABLE VERSIONS

CAPITOLATO_SPECIFICATION

ULTRACYCLE®

ULTRACYCLE® tested for over **1.000.000** cycles - **CLASS 4**

NORMA DIN EN 1906_DIN EN 1906 NORM

4 7 - 0 0 4 0 A

Per una descrizione dettagliata di tutte le specifiche tecniche presenti nel prodotto, da impiegare nei capitolati o nelle offerte pubbliche, fate riferimento alla sezione CAPITOLATI_for a detailed description of all the technical informations contained in the product, to be used in the specifications or in public tenders, please refer to the SPECIFICATIONS section.

Descrizione_Description: ARCO_design Leo De Carlo

ALU

Supporto_Support: ø25x2mm

												F1 97	F9 4B	ENOX 77	BLACK RAL 9005 33	WHITE SIGNAL RAL 9016 22	PURE WHITE RAL 9010 67	WHITE BIOV® 88	NOIR BIOV® 89	ANTHRACITE RAL 7016 78	LIGHT GREY RAL 7035 82	CLAY BROWN RAL 8003 80	IVORY RAL 1015 81	DARK BROWN RAL 8707 96
	8/135	CLAG		35-45	-	-	ø20	-	12	2	19946001	●	●	●	●	●	●	●	●	●	●	-	●	●
	7/135	CLAG		35-45	-	-	ø20	-	12	2	19946002	●	●	●	●	●	●	●	●	●	●	-	●	●
	-	CLAG		-	-	-	ø20	-	24	10	06548093	●	●	●	●	●	●	●	●	●	●	-	●	●
	-	-		-	-	-	ø20	-	24	10	06525146	●	●	●	●	●	●	●	●	●	●	-	●	●
	-	-		-	-	-	-	-	24	10	06525145	●	●	●	●	●	●	●	●	●	●	-	●	●
	(8)/135	-		35-45	-	-	ø20	-	4	6	05112233	●	●	●	●	●	●	●	●	●	●	-	●	●
	(7)/135	-		35-45	-	-	ø20	-	4	6	05112234	●	●	●	●	●	●	●	●	●	●	-	●	●
	(6)/135	-		35-45	-	-	ø20	-	4	6	05112235	●	●	●	●	●	●	●	●	●	●	-	●	●
	(5)/135	-		35-45	-	-	ø20	-	4	6	05112259	●	●	●	●	●	●	●	●	●	●	-	●	●
	(4)/135	-		35-45	-	-	ø20	-	4	6	05112260	●	●	●	●	●	●	●	●	●	●	-	●	●

ARCO SAFETY

design Leo De Carlo

BRASS | **ZAMAK** | ALU | AISI 316 | AISI 304

MANIGLIA PER PORTE INTERNE – SUPPORTO ø52x10mm INTERNAL DOORS HANDLE – SUPPORT ø52x10mm

CARATTERISTICHE FEATURES	**FISSAGGIO** FIXING	**FINITURE** FINISHES								**OPZIONI** OPTIONS			
		1.000h	500h	500h	500h	500h	500h	500h		EN-179	REI-60	IP-65

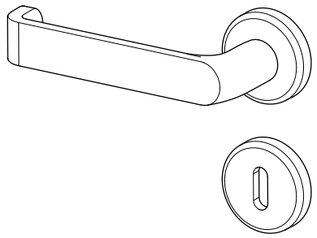

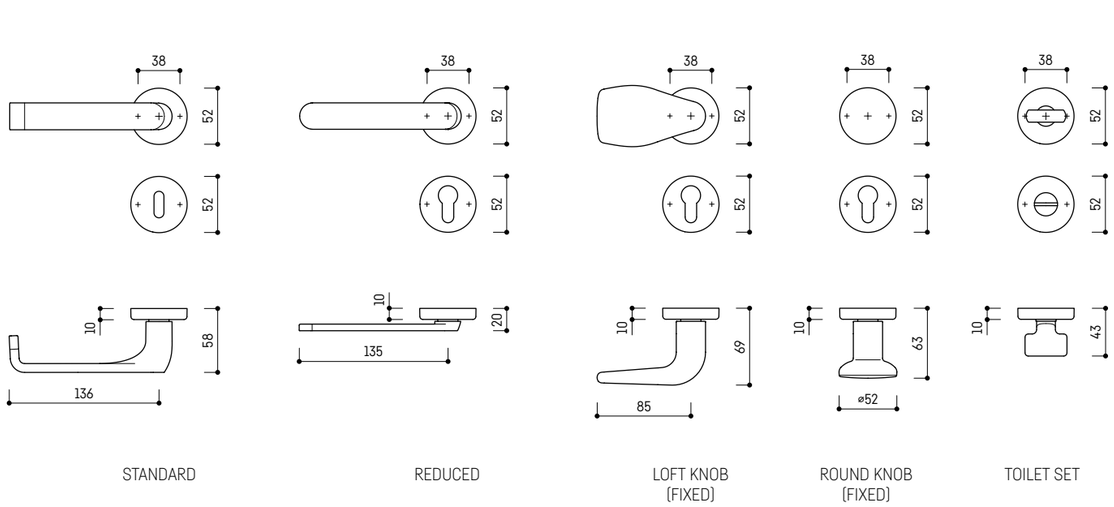

STANDARD | REDUCED | LOFT KNOB (FIXED) | ROUND KNOB (FIXED) | TOILET SET

VERSIONI DISPONIBILI AVAILABLE VERSIONS

CAPITOLATO SPECIFICATION

ULTRACYCLE®

ULTRACYCLE® tested for over **1.000.000** cycles - **CLASS 4**

NORMA DIN EN 1906 DIN EN 1906 NORM

4 | 7 | - | 0 | 0 | 4 | 0 | A

Per una descrizione dettagliata di tutte le specifiche tecniche presenti nel prodotto, da impiegare nei capitolati o nelle offerte pubbliche, fate riferimento alla sezione CAPITOLATI for a detailed description of all the technical informations contained in the product, to be used in the specifications or in public tenders, please refer to the SPECIFICATIONS section.

Descrizione Description: **ARCO SAFETY** design Leo De Carlo

Supporto Support: ZAMAK ø52x10mm

												PLATINUM ABACO* 62	BLACK PEARL ABACO* 50	PLATINUM 03	BLACK PEARL 04	COPPER PEARL 5B	NOIR PEARL 08	COPPER SHINING 52	CRYSTAL SHINING 07	NATURAL GOLD 51	WHITE PEARL 02
	8*		-	3,9x25 3,9x50	38	Ø8	-	12	2	17802001	●	●	●	●	●	●	●	●	●	●
	7*		-	3,9x25 3,9x50	38	Ø8	-	12	2	17802002	●	●	●	●	●	●	●	●	●	●
	8/135		35-45	3,9x50	38	Ø8	-	12	2	17802003	●	●	●	●	●	●	●	●	●	●
	8/135		35-45	3,9x25 3,9x50	38	Ø8	-	12	2	17802004	●	●	●	●	●	●	●	●	●	●
	7/135		35-45	3,9x25 3,9x50	38	Ø8	-	12	2	17802005	●	●	●	●	●	●	●	●	●	●
	8/135		35-65	3,9x25	38	Ø8	-	12	2	17802006	●	●	●	●	●	●	●	●	●	●
	7/135		35-65	3,9x25	38	Ø8	-	12	2	17802007	●	●	●	●	●	●	●	●	●	●
	8/135		35-45	3,9x50	38	Ø8	-	12	2	17802008	●	●	●	●	●	●	●	●	●	●
	8/135		35-45	3,9x25 3,9x50	38	Ø8	-	12	2	17802009	●	●	●	●	●	●	●	●	●	●
	7/135		35-45	3,9x25 3,9x50	38	Ø8	-	12	2	17802010	●	●	●	●	●	●	●	●	●	●
	8/135		35-45	3,9x25	38	-	-	12	2	17802011	●	●	●	●	●	●	●	●	●	●
	7/135		35-45	3,9x25	38	-	-	12	2	17802012	●	●	●	●	●	●	●	●	●	●
	8/135		35-45	3,9x50	38	Ø8	-	12	2	17802013	●	●	●	●	●	●	●	●	●	●
	8/160		60-90	3,9x25 3,9x75 3,9x95	38	Ø8	-	12	2	17802018	●	●	●	●	●	●	●	●	●	●
	8/135		35-45	3,9x25 3,9x50	38	Ø8	-	12	2	17802014	●	●	●	●	●	●	●	●	●	●
	8/160		60-90	3,9x25 3,9x75 3,9x95	38	Ø8	-	12	2	17802019	●	●	●	●	●	●	●	●	●	●
	7/135		35-45	3,9x25 3,9x50	38	Ø8	-	12	2	17802015	●	●	●	●	●	●	●	●	●	●
	7/160		60-90	3,9x25 3,9x75 3,9x95	38	Ø8	-	12	2	17802020	●	●	●	●	●	●	●	●	●	●
	8/135		35-65	3,9x25	38	Ø8	-	12	2	17802016	●	●	●	●	●	●	●	●	●	●
	8/160		60-90	3,9x25	38	Ø8	-	12	2	17802021	●	●	●	●	●	●	●	●	●	●
	7/135		35-65	3,9x25	38	Ø8	-	12	2	17802017	●	●	●	●	●	●	●	●	●	●
	7/160		60-90	3,9x25	38	Ø8	-	12	2	17802022	●	●	●	●	●	●	●	●	●	●
	(8)/135		35-45	3,9x50	38	Ø8	-	4	6	05112122	●	●	●	●	●	●	-	●	●	●

Descrizione_Description **ARCO SAFETY**_design Leo De Carlo

ZAMAK

Supporto_Support **ø52x10mm**

												PLATINUM ABACO* 62	BLACK PEARL ABACO* 50	PLATINUM PVD 03	BLACK PEARL PVD 04	COPPER PEARL PVD 5B	NOIR PEARL PVD 08	COPPER SHINING PVD 52	CRYSTAL SHINING PVD 07	NATURAL GOLD PVD 51	WHITE PEARL PVD 02
	(8)/135		35-45	3,9x25 3,9x50	38	Ø8	-	4	6	05112110	●	●	●	●	●	●	-	●	●	●
	(7)/135		35-45	3,9x25 3,9x50	38	Ø8	-	4	6	05112111	●	●	●	●	●	●	-	●	●	●
	(6)/135		35-45	3,9x25 3,9x50	38	Ø8	-	4	6	05112112	●	●	●	●	●	●	-	●	●	●
	(5)/135		35-45	3,9x25 3,9x50	38	Ø8	-	4	6	05112254	●	●	●	●	●	●	-	●	●	●
	(4)/135		35-45	3,9x25 3,9x50	38	Ø8	-	4	6	05112113	●	●	●	●	●	●	-	●	●	●
	8/135	GLAS	35-45	3,9x25 3,9x50	38	Ø8	-	12	1	19402005	●	●	●	●	●	●	-	●	●	●
	7/135	GLAS	35-45	3,9x25 3,9x50	38	Ø8	-	12	1	19402006	●	●	●	●	●	●	-	●	●	●
	8/155	GLAS	50-55	3,9x25 3,9x70	38	Ø8	-	12	1	19402007	●	●	●	●	●	●	-	●	●	●
	7/155	GLAS	50-55	3,9x25 3,9x70	38	Ø8	-	12	1	19402008	●	●	●	●	●	●	-	●	●	●
	8/165	GLAS	60-75	3,9x25 3,9x65 3,9x75 3,9x95	38	Ø8	-	12	1	19402009	●	●	●	●	●	●	-	●	●	●
	7/165	GLAS	60-75	3,9x25 3,9x65 3,9x75 3,9x95	38	Ø8	-	12	1	19402010	●	●	●	●	●	●	-	●	●	●
	8/175	GLAS	75-90	3,9x25 3,9x65 3,9x75 3,9x95	38	Ø8	-	12	1	19402011	●	●	●	●	●	●	-	●	●	●
	7/175	GLAS	75-90	3,9x25 3,9x65 3,9x75 3,9x95	38	Ø8	-	12	1	19402012	●	●	●	●	●	●	-	●	●	●

Descrizione_Description **1/2 ferro ancora**_1/2 anchor spindle

STEEL

Supporto_Support -

										MECHANISM 26
	8/60	GLAS CO	-	-	-	-	-	-	10	8	06727462	●
	8/70	GLAS CO	-	-	-	-	-	-	10	8	06727427	●
	8/80	GLAS CO	-	-	-	-	-	-	10	8	06727428	●
	8/90	GLAS CO	-	-	-	-	-	-	10	8	06727429	●
	8/100	GLAS CO	-	-	-	-	-	-	10	8	06727463	●
	7/60	GLAS CO	-	-	-	-	-	-	10	8	06727432	●
	7/70	GLAS CO	-	-	-	-	-	-	10	8	06727433	●
	7/80	GLAS CO	-	-	-	-	-	-	10	8	06727434	●
	7/90	GLAS CO	-	-	-	-	-	-	10	8	06727435	●
	7/100	GLAS CO	-	-	-	-	-	-	10	8	06727436	●

Descrizione_Description **LOFT/ROUND** pomolo fisso_fixed knob

ZAMAK

Supporto_Support **ø52x10mm**

												PLATINUM ABACO* 62	BLACK PEARL ABACO* 50	PLATINUM PVD 03	BLACK PEARL PVD 04	COPPER PEARL PVD 5B	NOIR PEARL PVD 08	COPPER SHINING PVD 52	CRYSTAL SHINING PVD 07	NATURAL GOLD PVD 51	WHITE PEARL PVD 02
	7* or 8*	GLAS		-	3,9x25 3,9x50	38	Ø8	-	12	1	17002001	●	●	●	●	●	●	●	●	●	●
	7* or 8*	GLAS		-	3,9x25 3,9x50	38	Ø8	-	12	1	19602001	●	●	●	●	●	●	●	●	●	●

Descrizione_Description **1/2 ferro per pomolo fisso**_1/2 fixed knob spindle

STEEL

Supporto_Support -

											MECHANISM 26
	7/90	GLAS CO	-	45-55	-	-	-	-	10	8	06727507	●
	7/100	GLAS CO	-	50-65	-	-	-	-	10	8	06727508	●
	7/110	GLAS CO	-	60-75	-	-	-	-	10	8	06727509	●
	7/120	GLAS CO	-	70-85	-	-	-	-	10	8	06727510	●
	7/130	GLAS CO	-	80-95	-	-	-	-	10	8	06727551	●
	7/140	GLAS CO	-	90-105	-	-	-	-	10	8	06727552	●
	8/90	GLAS CO	-	45-55	-	-	-	-	10	8	06727503	●
	8/100	GLAS CO	-	50-65	-	-	-	-	10	8	06727504	●
	8/110	GLAS CO	-	60-75	-	-	-	-	10	8	06727505	●
	8/120	GLAS CO	-	70-85	-	-	-	-	10	8	06727506	●
	8/130	GLAS CO	-	80-95	-	-	-	-	10	8	06727549	●
	8/140	GLAS CO	-	90-105	-	-	-	-	10	8	06727550	●

ARCO SAFETY

design Leo De Carlo

CE

BRASS · **ZAMAK** · ALU · AISI 316 · AISI 304

MANIGLIA PER PORTE INTERNE – SUPPORTO ø45X8mm _INTERNAL DOORS HANDLE – SUPPORT ø45X8mm

CARATTERISTICHE_FEATURES	**FISSAGGIO**_FIXING	**FINITURE**_FINISHES	**OPZIONI**_OPTIONS
		P 1.000h · 304 500h · 316 500h · 500h · 500h · PVD 500h · 500h	EN-179 · REI-60 · IP-65

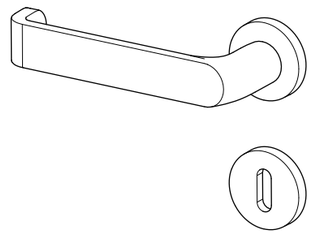

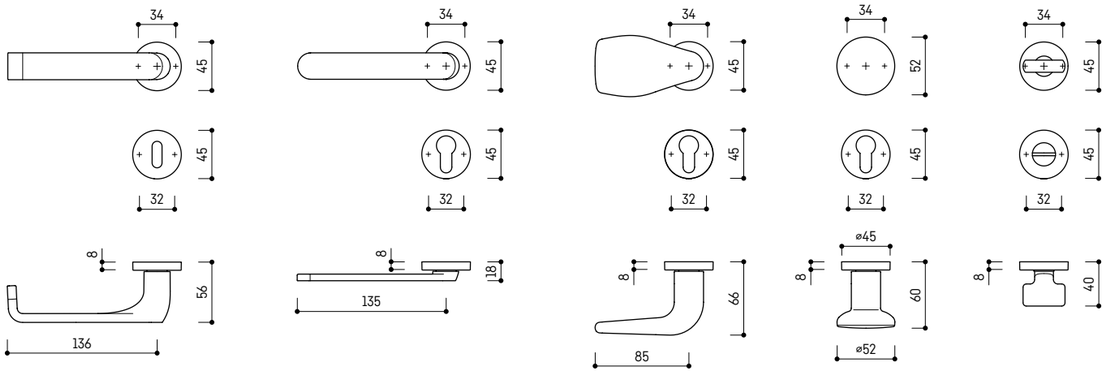

STANDARD · REDUCED · LOFT KNOB (FIXED) · ROUND KNOB (FIXED) · TOILET SET

VERSIONI DISPONIBILI_AVAILABLE VERSIONS

CAPITOLATO_SPECIFICATION

ULTRACYCLE®

ULTRACYCLE® tested for over **1.000.000** cycles - **CLASS 4**

NORMA DIN EN 1906_DIN EN 1906 NORM

4 | 7 | - | 0 | 0 | 4 | 0 | A

Per una descrizione dettagliata di tutte le specifiche tecniche presenti nel prodotto, da impiegare nei capitolati o nelle offerte pubbliche, fate riferimento alla sezione CAPITOLATI_for a detailed description of all the technical informations contained in the product, to be used in the specifications or in public tenders, please refer to the SPECIFICATIONS section.

Descrizione_Description: **ARCO SAFETY**_design Leo De Carlo

ZAMAK

Supporto_Support: **ø45X8mm**

												PLATINUM ABACO* 62	BLACK PEARL ABACO* 50	PLATINUM 03	BLACK PEARL 04	COPPER PEARL 5B	NOIR PEARL 08	COPPER SHINING 52	CRYSTAL SHINING 07	NATURAL GOLD 51	WHITE PEARL 02
	8*		-	3,9x25	34/32	-	-	12	2	17877001	-	-	●	●	●	●	●	●	●	●
	7*		-	3,9x25	34/32	-	-	12	2	17877002	-	-	●	●	●	●	●	●	●	●
	8/135		35-45	3,9x25	34	-	-	12	2	17877003	-	-	●	●	●	●	●	●	●	●
	7/135		35-45	3,9x25	34	-	-	12	2	17877004	-	-	●	●	●	●	●	●	●	●
	8/135		35-45	3,9x25	34/32	-	-	12	2	17877005	-	-	●	●	●	●	●	●	●	●
	7/135		35-45	3,9x25	34/32	-	-	12	2	17877006	-	-	●	●	●	●	●	●	●	●
	8/135		35-65	3,9x25	34/32	-	-	12	2	17877007	-	-	●	●	●	●	●	●	●	●
	7/135		35-65	3,9x25	34/32	-	-	12	2	17877008	-	-	●	●	●	●	●	●	●	●
	8/160		60-90	3,9x25	34/32	-	-	12	2	17877009	-	-	●	●	●	●	●	●	●	●
	7/160		60-90	3,9x25	34/32	-	-	12	2	17877010	-	-	●	●	●	●	●	●	●	●
	(8)/135	-	35-45	3,9x25	34/32	-	-	4	6	05112197	-	-	●	●	●	●	●	●	●	●
	(7)/135	-	35-45	3,9x25	34/32	-	-	4	6	05112198	-	-	●	●	●	●	●	●	●	●
	(6)/135	-	35-45	3,9x25	34/32	-	-	4	6	05112199	-	-	●	●	●	●	●	●	●	●
	(5)/135	-	35-45	3,9x25	34/32	-	-	4	6	05112257	-	-	●	●	●	●	●	●	●	●
	(4)/135	-	35-45	3,9x25	34/32	-	-	4	6	05112200	-	-	●	●	●	●	●	●	●	●
	8/135		35-45	3,9x25	34	-	-	12	1	19477001	-	-	●	●	●	●	●	●	●	●
	7/135		35-45	3,9x25	34	-	-	12	1	19477002	-	-	●	●	●	●	●	●	●	●
	8/155		50-55	3,9x25	34	-	-	12	1	19477003	-	-	●	●	●	●	●	●	●	●
	7/155		50-55	3,9x25	34	-	-	12	1	19497004	-	-	●	●	●	●	●	●	●	●
	8/165		60-75	3,9x25	34	-	-	12	1	19477005	-	-	●	●	●	●	●	●	●	●
	7/165		60-75	3,9x25	34	-	-	12	1	19477006	-	-	●	●	●	●	●	●	●	●
	8/175		75-90	3,9x25	34	-	-	12	1	19477007	-	-	●	●	●	●	●	●	●	●
	7/175		75-90	3,9x25	34	-	-	12	1	19477008	-	-	●	●	●	●	●	●	●	●

Descrizione_Description **1/2 ferro ancora**_1/2 anchor spindle

STEEL

Supporto_Support -

												MECHANISM 26
8/60	CLAQ CO	-	-	-	-	-	-	10	8	06727462		●
8/70	CLAQ CO	-	-	-	-	-	-	10	8	06727427		●
8/80	CLAQ CO	-	-	-	-	-	-	10	8	06727428		●
8/90	CLAQ CO	-	-	-	-	-	-	10	8	06727429		●
8/100	CLAQ CO	-	-	-	-	-	-	10	8	06727463		●
7/60	CLAQ CO	-	-	-	-	-	-	10	8	06727432		●
7/70	CLAQ CO	-	-	-	-	-	-	10	8	06727433		●
7/80	CLAQ CO	-	-	-	-	-	-	10	8	06727434		●
7/90	CLAQ CO	-	-	-	-	-	-	10	8	06727435		●
7/100	CLAQ CO	-	-	-	-	-	-	10	8	06727436		●

Descrizione_Description **LOFT/ROUND** pomolo fisso_fixed knob

ZAMAK

Supporto_Support **ø45X8mm**

											PLATINUM ABACO® 62	BLACK PEARL ABACO® 50	PLATINUM PVD 03	BLACK PEARL PVD 04	COPPER PEARL PVD 5B	NOIR PEARL PVD 08	COPPER SHINING PVD 52	CRYSTAL SHINING PVD 07	NATURAL GOLD PVD 51	WHITE PEARL PVD 02
7" or 8"	CLAQ	-	-	3,9x25	34	-	-	12	1	17077001	-	-	●	●	●	●	●	●	●	●
7" or 8"	CLAQ	-	-	3,9x25	34	-	-	12	1	19677001	-	-	●	●	●	●	●	●	●	●

Descrizione_Description **1/2 ferro per pomolo fisso**_1/2 fixed knob spindle

STEEL

Supporto_Support -

											MECHANISM 26
7/90	CLAQ CO	-	45-55	-	-	-	-	10	8	06727507	●
7/100	CLAQ CO	-	50-65	-	-	-	-	10	8	06727508	●
7/110	CLAQ CO	-	60-75	-	-	-	-	10	8	06727509	●
7/120	CLAQ CO	-	70-85	-	-	-	-	10	8	06727510	●
7/130	CLAQ CO	-	80-95	-	-	-	-	10	8	06727551	●
7/140	CLAQ CO	-	90-105	-	-	-	-	10	8	06727552	●
8/90	CLAQ CO	-	45-55	-	-	-	-	10	8	06727503	●
8/100	CLAQ CO	-	50-65	-	-	-	-	10	8	06727504	●
8/110	CLAQ CO	-	60-75	-	-	-	-	10	8	06727505	●
8/120	CLAQ CO	-	70-85	-	-	-	-	10	8	06727506	●
8/130	CLAQ CO	-	80-95	-	-	-	-	10	8	06727549	●
8/140	CLAQ CO	-	90-105	-	-	-	-	10	8	06727550	●

ARCO SAFETY

design Leo De Carlo

CE

BRASS **ZAMAK** ALU AISI 316 AISI 304

MANIGLIA PER PORTE INTERNE – SUPPORTO MINIMAL ø25x2mm_INTERNAL DOORS HANDLE – SUPPORT MINIMAL ø25x2mm

CARATTERISTICHE_FEATURES	**FISSAGGIO**_FIXING	**FINITURE**_FINISHES	**OPZIONI**_OPTIONS
CLAQ		1.000h 500h 500h 500h 500h PVD 500h 500h	EN-179 REI-60 IP-65

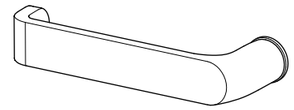

STANDARD TOILET SET

VERSIONI DISPONIBILI_AVAILABLE VERSIONS

CAPITOLATO_SPECIFICATION

ULTRACYCLE®

ULTRACYCLE® tested for over **1.000.000** cycles - **CLASS 4**

NORMA DIN EN 1906_DIN EN 1906 NORM

4 | 7 | - | 0 | 0 | 4 | 0 | A

Per una descrizione dettagliata di tutte le specifiche tecniche presenti nel prodotto, da impiegare nei capitolati o nelle offerte pubbliche, fate riferimento alla sezione CAPITOLATI_for a detailed description of all the technical informations contained in the product, to be used in the specifications or in public tenders, please refer to the SPECIFICATIONS section.

Descrizione_Description | **ARCO SAFETY**_design Leo De Carlo

ZAMAK

Supporto_Support | **MINIMAL ø25x2mm**

	■	+										PLATINUM ABACO* 62	BLACK PEARL ABACO* 50	PLATINUM 03	BLACK PEARL 04	COPPER PEARL 5B	NOIR PEARL 08	COPPER SHINING 52	CRYSTAL SHINING 07	NATURAL GOLD 51	WHITE PEARL 02
	8/135	CLAC	◎	35-45	-	-	ø20	-	12	2	17846001	-	-	●	●	●	●	-	●	●	●
	7/135	CLAC	◎	35-45	-	-	ø20	-	12	2	17846002	-	-	●	●	●	●	-	●	●	●
◎ ◎	-	CLAC	◎	-	-	-	ø20	-	24	10	06548093	-	-	●	●	●	●	-	●	●	●
◍ ◍	-	-	◎	-	-	-	ø20	-	24	10	06525146	-	-	●	●	●	●	-	●	●	●
⬯ ⬯	-	-	◎	-	-	-	-	-	24	10	06525145	-	-	●	●	●	●	-	●	●	●
⊖ ⊖	(8)/135	-	◎	35-45	-	-	ø20	-	4	6	05112233	-	-	●	●	●	●	-	●	●	●
	(7)/135	-	◎	35-45	-	-	ø20	-	4	6	05112234	-	-	●	●	●	●	-	●	●	●
	(6)/135	-	◎	35-45	-	-	ø20	-	4	6	05112235	-	-	●	●	●	●	-	●	●	●
	(5)/135	-	◎	35-45	-	-	ø20	-	4	6	05112259	-	-	●	●	●	●	-	●	●	●
	(4)/135	-	◎	35-45	-	-	ø20	-	4	6	05112260	-	-	●	●	●	●	-	●	●	●

ARCO SAFETY

design Leo De Carlo

CE

BRASS | **ZAMAK** | ALU | AISI 316 | AISI 304

MANIGLIA PER PORTE INTERNE – SUPPORTO EASYPIN ø55x2mm_INTERNAL DOORS HANDLE – SUPPORT EASYPIN ø55x2mm

CARATTERISTICHE_FEATURES	**FISSAGGIO**_FIXING	**FINITURE**_FINISHES	**OPZIONI**_OPTIONS
CLAC		1.000h · 500h · 500h · 500h · 500h · PVD 500h · 500h	EN-179

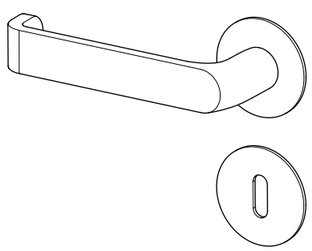

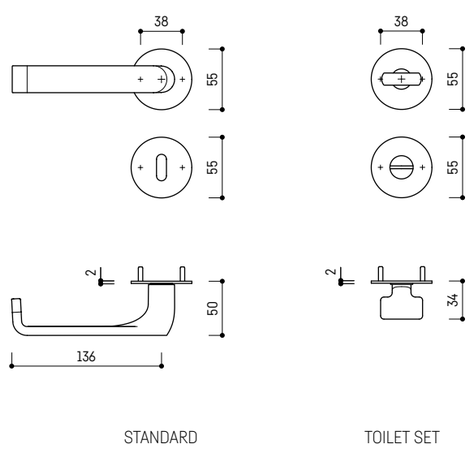

STANDARD TOILET SET

VERSIONI DISPONIBILI_AVAILABLE VERSIONS

CAPITOLATO_SPECIFICATION

ULTRACYCLE®

ULTRACYCLE® tested for over **1.000.000** cycles - **CLASS 4**

NORMA DIN EN 1906_DIN EN 1906 NORM

4 | 7 | - | 0 | 0 | 4 | 0 | A

Per una descrizione dettagliata di tutte le specifiche tecniche presenti nel prodotto, da impiegare nei capitolati o nelle offerte pubbliche, fate riferimento alla sezione CAPITOLATI_for a detailed description of all the technical informations contained in the product, to be used in the specifications or in public tenders, please refer to the SPECIFICATIONS section.

Descrizione_Description | **ARCO SAFETY**_design Leo De Carlo

ZAMAK

Supporto_Support | **EASYPIN ø55x2mm**

	■	+										PLATINUM ABACO® 62	BLACK PEARL ABACO® 50	PLATINUM PVD 03	BLACK PEARL PVD 04	COPPER PEARL PVD 5B	NOIR PEARL PVD 08	COPPER SHINING PVD 52	CRYSTAL SHINING PVD 07	NATURAL GOLD PVD 51	WHITE PEARL PVD 02
	8/135	CLAC		35-45	-	38	Ø7	-	12	2	17859001	-	-	●	●	●	●	-	●	●	●
	7/135	CLAC		35-45	-	38	Ø7	-	12	12	17859002	-	-	●	●	●	●	-	●	●	●
	-	CLAC		-	-	38	Ø7	-	24	10	06548077	-	-	●	●	●	●	-	●	●	●
	-	-		-	-	38	Ø7	-	24	10	06525121	-	-	●	●	●	●	-	●	●	●
	-	-		-	-	38	Ø7	-	24	10	06525120	-	-	●	●	●	●	-	●	●	●
	(8)/135	-		35-45	-	38	Ø7	-	4	6	05112251	-	-	●	●	●	●	-	●	●	●
	(7)/135	-		35-45	-	38	Ø7	-	4	6	05112261	-	-	●	●	●	●	-	●	●	●
	(6)/135	-		35-45	-	38	Ø7	-	4	6	05112262	-	-	●	●	●	●	-	●	●	●
	(5)/135	-		35-45	-	38	Ø7	-	4	6	05112263	-	-	●	●	●	●	-	●	●	●
	(4)/135	-		35-45	-	38	Ø7	-	4	6	05112264	-	-	●	●	●	●	-	●	●	●

ARCO SAFETY

design Leo De Carlo

CE

BRASS | **ZAMAK** | ALU | AISI 316 | AISI 304

MANIGLIA PER PORTE INTERNE – SUPPORTO 40x235x9mm_INTERNAL DOORS HANDLE – SUPPORT 40x235x9mm

CARATTERISTICHE_FEATURES	**FISSAGGIO**_FIXING	**FINITURE**_FINISHES	**OPZIONI**_OPTIONS
CLAC		1.000h · 500h · 500h · 500h · 500h · PVD 500h · 500h	EN-179 · REI-60 · IP-65

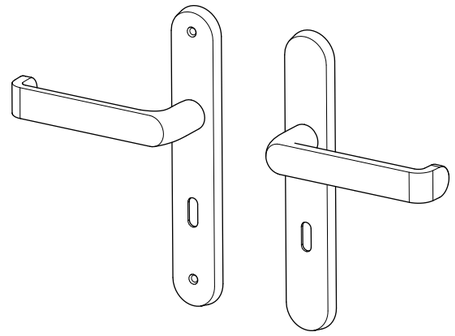

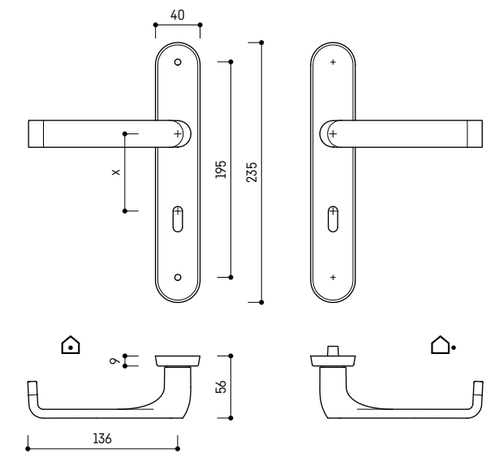

VERSIONI DISPONIBILI_AVAILABLE VERSIONS

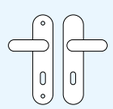
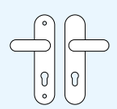
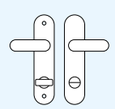

CAPITOLATO_SPECIFICATION

ULTRACYCLE®

ULTRACYCLE® tested for over **1.000.000** cycles - **CLASS 4**

NORMA DIN EN 1906_DIN EN 1906 NORM

4 | 7 | - | 0 | 0 | 4 | 0 | A

Per una descrizione dettagliata di tutte le specifiche tecniche presenti nel prodotto, da impiegare nei capitolati o nelle offerte pubbliche, fate riferimento alla sezione CAPITOLATI_for a detailed description of all the technical informations contained in the product, to be used in the specifications or in public tenders, please refer to the SPECIFICATIONS section.

Descrizione_Description | **ARCO SAFETY**_design Leo De Carlo

ZAMAK

Supporto_Support | **40x235x9mm**

	■	+										PLATINUM ABACO* 62	BLACK PEARL ABACO* 50	PLATINUM PVD 03	BLACK PEARL PVD 04	COPPER PEARL PVD 5B	NOIR PEARL PVD 08	COPPER SHINING PVD 52	CRYSTAL SHINING PVD 07	NATURAL GOLD PVD 51	WHITE PEARL PVD 02
	8/135	CLAO		35-55	M4x75 SEC	195	Ø10	72	12	2	17801002	-	-	●	●	●	●	-	●	●	●
	7/135	CLAO		35-55	M4x75 SEC	195	Ø10	70	12	2	17801005	-	-	●	●	●	●	-	●	●	●
	8/135	CLAO		35-55	M4x75 SEC	195	Ø10	72	12	2	17801001	-	-	●	●	●	●	-	●	●	●
	7/135	CLAO		35-55	M4x75 SEC	195	Ø10	70	12	2	17801004	-	-	●	●	●	●	-	●	●	●
	8(8)/135	CLAO		35-55	M4x75 SEC	195	Ø10	78	12	2	17801003	-	-	●	●	●	●	-	●	●	●
	7(6)/135	CLAO		35-55	M4x75 SEC	195	Ø10	70	12	2	17801006	-	-	●	●	●	●	-	●	●	●

ARCO SAFETY

design Leo De Carlo

CE

BRASS | ZAMAK | **ALU** | AISI 316 | AISI 304

MANIGLIA PER PORTE INTERNE – SUPPORTO ø52x10mm_INTERNAL DOORS HANDLE – SUPPORT ø52x10mm

CARATTERISTICHE_FEATURES					**FISSAGGIO**_FIXING						**FINITURE**_FINISHES							**OPZIONI**_OPTIONS			
	CLAO	R									1.000h	304 500h	316 500h	500h	500h	PVD 500h	500h		EN-179	REI-60	IP-65

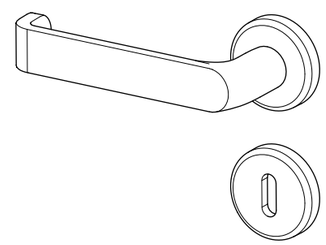

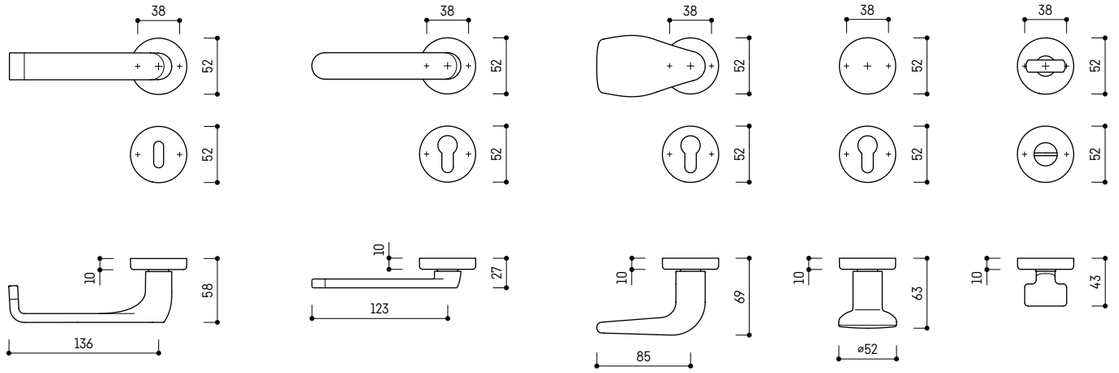

STANDARD | REDUCED | LOFT KNOB (FIXED) | ROUND KNOB (FIXED) | TOILET SET

VERSIONI DISPONIBILI_AVAILABLE VERSIONS

CAPITOLATO_SPECIFICATION

ULTRACYCLE®

ULTRACYCLE® tested for over **1.000.000** cycles - **CLASS 4**

NORMA DIN EN 1906_DIN EN 1906 NORM

4 | 7 | - | 0 | 0 | 4 | 0 | A

Per una descrizione dettagliata di tutte le specifiche tecniche presenti nel prodotto, da impiegare nei capitolati o nelle offerte pubbliche, fate riferimento alla sezione CAPITOLATI_for a detailed description of all the technical informations contained in the product, to be used in the specifications or in public tenders, please refer to the SPECIFICATIONS section.

Descrizione_Description ARCO SAFETY_design Leo De Carlo

ALU

Supporto_Support ø52x10mm

| | | |

Descrizione_Description **ARCO SAFETY**_design Leo De Carlo

Supporto_Support ALU

ø52x10mm

■	+		x	x							F1 97	F9 48	ENOX 77	BLACK RAL 9005 33	WHITE SIGNAL RAL 9016 22	PURE WHITE RAL 9010 67	WHITE BIOV* 88	NOIR BIOV* 89	ANTHRACITE RAL 7016 78	LIGHT GREY RAL 7035 82	CLAY BROWN RAL 8003 80	IVORY RAL 1015 81	DARK BROWN RAL 8017 96
7/135			35-45	3,9x25 3,9x50	38	Ø8	-	12	1	17902006	●	●	●	●	●	●	●	●	●	●	-	●	●
8/155			50-55	3,9x25 3,9x70	38	Ø8	-	12	1	17902007	●	●	●	●	●	●	●	●	●	●	-	●	●
7/155			50-55	3,9x25 3,9x70	38	Ø8	-	12	1	17902008	●	●	●	●	●	●	●	●	●	●	-	●	●
8/165			60-75	3,9x25 3,9x65 3,9x75 3,9x95	38	Ø8	-	12	1	17902009	●	●	●	●	●	●	●	●	●	●	-	●	●
7/165			60-75	3,9x25 3,9x65 3,9x75 3,9x95	38	Ø8	-	12	1	17902010	●	●	●	●	●	●	●	●	●	●	-	●	●
8/175			75-90	3,9x25 3,9x65 3,9x75 3,9x95	38	Ø8	-	12	1	17902011	●	●	●	●	●	●	●	●	●	●	-	●	●
7/175			75-90	3,9x25 3,9x65 3,9x75 3,9x95	38	Ø8	-	12	1	17902012	●	●	●	●	●	●	●	●	●	●	-	●	●

Descrizione_Description **1/2 ferro ancora**_1/2 anchor spindle

STEEL

Supporto_Support -

■	+		x	x							MECHANISM 26
8/60		-	-	-	-	-	-	10	8	06727462	●
8/70		-	-	-	-	-	-	10	8	06727427	●
8/80		-	-	-	-	-	-	10	8	06727428	●
8/90		-	-	-	-	-	-	10	8	06727429	●
8/100		-	-	-	-	-	-	10	8	06727463	●
7/60		-	-	-	-	-	-	10	8	06727432	●
7/70		-	-	-	-	-	-	10	8	06727433	●
7/80		-	-	-	-	-	-	10	8	06727434	●
7/90		-	-	-	-	-	-	10	8	06727435	●
7/100		-	-	-	-	-	-	10	8	06727436	●

Descrizione_Description **LOFT/ROUND** pomolo fisso_fixed knob

Supporto_Support ALU

ø52x10mm

■	+		x	x							F1 97	F9 48	ENOX 77	BLACK RAL 9005 33	WHITE SIGNAL RAL 9016 22	PURE WHITE RAL 9010 67	WHITE BIOV* 88	NOIR BIOV* 89	ANTHRACITE RAL 7016 78	LIGHT GREY RAL 7035 82	CLAY BROWN RAL 8003 80	IVORY RAL 1015 81	DARK BROWN RAL 8017 96
7" or 8"			-	3,9x25 3,9x50	38	Ø8	-	12	1	19502001	●	●	●	●	●	●	●	●	●	●	-	●	●
7" or 8"			-	3,9x25 3,9x50	38	Ø8	-	12	1	19702001	●	●	●	●	●	●	●	●	●	●	-	●	●

Descrizione_Description **1/2 ferro per pomolo fisso**_1/2 fixed knob spindle

STEEL

Supporto_Support -

■	+		x	x							MECHANISM 26
7/90		-	45-55	-	-	-	-	10	8	06727507	●
7/100		-	50-65	-	-	-	-	10	8	06727508	●
7/110		-	60-75	-	-	-	-	10	8	06727509	●
7/120		-	70-85	-	-	-	-	10	8	06727510	●
7/130		-	80-95	-	-	-	-	10	8	06727551	●
7/140		-	90-105	-	-	-	-	10	8	06727552	●
8/90		-	45-55	-	-	-	-	10	8	06727503	●
8/100		-	50-65	-	-	-	-	10	8	06727504	●
8/110		-	60-75	-	-	-	-	10	8	06727505	●
8/120		-	70-85	-	-	-	-	10	8	06727506	●
8/130		-	80-95	-	-	-	-	10	8	06727549	●
8/140		-	90-105	-	-	-	-	10	8	06727550	●

ARCO SAFETY

design Leo De Carlo

BRASS · ZAMAK · **ALU** · AISI 316 · AISI 304

MANIGLIA PER PORTE INTERNE – SUPPORTO ø45x8mm INTERNAL DOORS HANDLE – SUPPORT ø45x8mm

CARATTERISTICHE FEATURES	**FISSAGGIO** FIXING	**FINITURE** FINISHES	**OPZIONI** OPTIONS
		1.000h · 304 500h · 316 500h · 500h · 500h · PVD 500h · 500h	EN-179 · REI-60 · IP-65

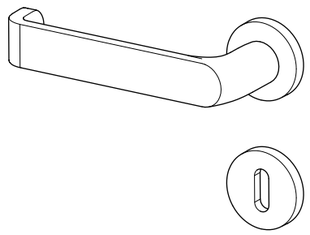

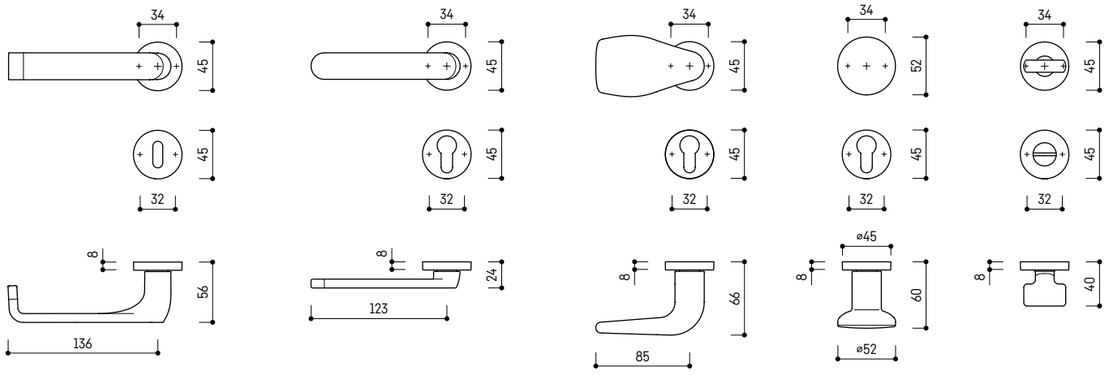

STANDARD · REDUCED · LOFT KNOB (FIXED) · ROUND KNOB (FIXED) · TOILET SET

VERSIONI DISPONIBILI AVAILABLE VERSIONS

CAPITOLATO SPECIFICATION

ULTRACYCLE®

ULTRACYCLE® tested for over **1.000.000** cycles - **CLASS 4**

NORMA DIN EN 1906 DIN EN 1906 NORM

4 | 7 | - | 0 | 0 | 4 | 0 | A

Per una descrizione dettagliata di tutte le specifiche tecniche presenti nel prodotto, da impiegare nei capitolati o nelle offerte pubbliche, fate riferimento alla sezione CAPITOLATI for a detailed description of all the technical informations contained in the product, to be used in the specifications or in public tenders, please refer to the SPECIFICATIONS section.

Descrizione Description: **ARCO SAFETY** design Leo De Carlo

ALU

Supporto Support: ø45x8mm

	■	+			X								F1 97	F9 48	ENOX 77	BLACK RAL 9005 33	WHITE SIGNAL RAL 9016 22	PURE WHITE RAL 9010 67	WHITE BIOV* 88	NOIR BIOV* 89	ANTHRACITE RAL 7016 78	LIGHT GREY RAL 7035 82	CLAY BROWN RAL 8003 80	IVORY RAL 1015 81	DARK BROWN RAL 8017 96
	8*			-	3,9x25	34/32	-	-	12	2	18077001		●	●	●	●	●	●	●	●	●	●	-	●	●
	7*			-	3,9x25	34/32	-	-	12	2	18077002		●	●	●	●	●	●	●	●	●	●	-	●	●
	8/135			35-45	3,9x25	34	-	-	12	2	18077003		●	●	●	●	●	●	●	●	●	●	-	●	●
	7/135			35-45	3,9x25	34	-	-	12	2	18077004		●	●	●	●	●	●	●	●	●	●	-	●	●
	8/135			35-45	3,9x25	34/32	-	-	12	2	18077005		●	●	●	●	●	●	●	●	●	●	-	●	●
	7/135			35-45	3,9x25	34/32	-	-	12	2	18077006		●	●	●	●	●	●	●	●	●	●	-	●	●
	8/135			35-65	3,9x25	34/32	-	-	12	2	18077007		●	●	●	●	●	●	●	●	●	●	-	●	●
	7/135			35-65	3,9x25	34/32	-	-	12	2	18077008		●	●	●	●	●	●	●	●	●	●	-	●	●
	8/160			60-90	3,9x25	34/32	-	-	12	2	18077009		●	●	●	●	●	●	●	●	●	●	-	●	●
	7/160			60-90	3,9x25	34/32	-	-	12	2	18077010		●	●	●	●	●	●	●	●	●	●	-	●	●
	(8)/135	-		35-45	3,9x25	34/32	-	-	4	6	05112185		●	●	●	●	●	●	●	●	●	●	-	●	●
	(7)/135	-		35-45	3,9x25	34/32	-	-	4	6	05112186		●	●	●	●	●	●	●	●	●	●	-	●	●
	(6)/135	-		35-45	3,9x25	34/32	-	-	4	6	05112187		●	●	●	●	●	●	●	●	●	●	-	●	●
	(5)/135	-		35-45	3,9x25	34/32	-	-	4	6	05112258		●	●	●	●	●	●	●	●	●	●	-	●	●
	(4)/135	-		35-45	3,9x25	34/32	-	-	4	6	05112188		●	●	●	●	●	●	●	●	●	●	-	●	●
	8/135			35-45	3,9x25	34	-	-	12	1	17977001		●	●	●	●	●	●	●	●	●	●	-	●	●
	7/135			35-45	3,9x25	34	-	-	12	1	17977002		●	●	●	●	●	●	●	●	●	●	-	●	●
	8/155			50-55	3,9x25	34	-	-	12	1	17977003		●	●	●	●	●	●	●	●	●	●	-	●	●
	7/155			50-55	3,9x25	34	-	-	12	1	17977004		●	●	●	●	●	●	●	●	●	●	-	●	●
	8/165			60-75	3,9x25	34	-	-	12	1	17977005		●	●	●	●	●	●	●	●	●	●	-	●	●
	7/165			60-75	3,9x25	34	-	-	12	1	17977006		●	●	●	●	●	●	●	●	●	●	-	●	●
	8/175			75-90	3,9x25	34	-	-	12	1	17977007		●	●	●	●	●	●	●	●	●	●	-	●	●
	7/175			75-90	3,9x25	34	-	-	12	1	17977008		●	●	●	●	●	●	●	●	●	●	-	●	●

Descrizione_Description **1/2 ferro ancora**_1/2 anchor spindle

STEEL

Supporto_Support -

												MECHANISM 26
8/60	CLAO	-	-	-	-	-	-	10	8	06727462		●
8/70	CLAO	-	-	-	-	-	-	10	8	06727427		●
8/80	CLAO	-	-	-	-	-	-	10	8	06727428		●
8/90	CLAO	-	-	-	-	-	-	10	8	06727429		●
8/100	CLAO	-	-	-	-	-	-	10	8	06727463		●
7/60	CLAO	-	-	-	-	-	-	10	8	06727432		●
7/70	CLAO	-	-	-	-	-	-	10	8	06727433		●
7/80	CLAO	-	-	-	-	-	-	10	8	06727434		●
7/90	CLAO	-	-	-	-	-	-	10	8	06727435		●
7/100	CLAO	-	-	-	-	-	-	10	8	06727436		●

Descrizione_Description **LOFT/ROUND** pomolo fisso_fixed knob

ALU

Supporto_Support ø45x8mm

													F1 97	F9 4B	ENOX 77	BLACK RAL 9005 33	WHITE SIGNAL RAL 9016 22	PURE WHITE RAL 9010 67	WHITE BIOV* 88	NOIR BIOV* 89	ANTHRACITE RAL 7024 78	LIGHT GREY RAL 7035 82	CLAY BROWN RAL 8003 80	IVORY RAL 1015 81	DARK BROWN RAL 8707 96
7* or 8*	CLAO	-	-	3,9x25	34	-	-	12	1	19577001			●	●	●	●	●	●	●	●	●	●	-	●	●
7* or 8*	CLAO	-	-	3,9x25	34	-	-	12	1	19777001			●	●	●	●	●	●	●	●	●	●	-	●	●

Descrizione_Description **1/2 ferro per pomolo fisso**_1/2 fixed knob spindle

STEEL

Supporto_Support -

											MECHANISM 26
7/90	CLAO	-	45-55	-	-	-	-	10	8	06727507	●
7/100	CLAO	-	50-65	-	-	-	-	10	8	06727508	●
7/110	CLAO	-	60-75	-	-	-	-	10	8	06727509	●
7/120	CLAO	-	70-85	-	-	-	-	10	8	06727510	●
7/130	CLAO	-	80-95	-	-	-	-	10	8	06727551	●
7/140	CLAO	-	90-105	-	-	-	-	10	8	06727552	●
8/90	CLAO	-	45-55	-	-	-	-	10	8	06727503	●
8/100	CLAO	-	50-65	-	-	-	-	10	8	06727504	●
8/110	CLAO	-	60-75	-	-	-	-	10	8	06727505	●
8/120	CLAO	-	70-85	-	-	-	-	10	8	06727506	●
8/130	CLAO	-	80-95	-	-	-	-	10	8	06727549	●
8/140	CLAO	-	90-105	-	-	-	-	10	8	06727550	●

ARCO SAFETY

design Leo De Carlo

CE

BRASS ZAMAK **ALU** AISI 316 AISI 304

MANIGLIA PER PORTE INTERNE – SUPPORTO MINIMAL ø25x2mm_INTERNAL DOORS HANDLE – SUPPORT MINIMAL ø25x2mm

CARATTERISTICHE_FEATURES	**FISSAGGIO**_FIXING	**FINITURE**_FINISHES	**OPZIONI**_OPTIONS
CLAO		1.000h · 304 500h · 316 500h · 500h · 500h · PVD 500h · 500h	EN-179

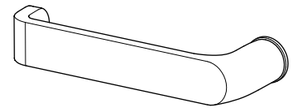

STANDARD TOILET SET

VERSIONI DISPONIBILI_AVAILABLE VERSIONS

CAPITOLATO_SPECIFICATION

ULTRACYCLE®

ULTRACYCLE® tested for over **1.000.000** cycles - **CLASS 4**

NORMA DIN EN 1906_DIN EN 1906 NORM

4 | 7 | - | 0 | 0 | 4 | 0 | A

Per una descrizione dettagliata di tutte le specifiche tecniche presenti nel prodotto, da impiegare nei capitolati o nelle offerte pubbliche, fate riferimento alla sezione CAPITOLATI_for a detailed description of all the technical informations contained in the product, to be used in the specifications or in public tenders, please refer to the SPECIFICATIONS section.

Descrizione_Description | **ARCO SAFETY**_design Leo De Carlo

ALU

Supporto_Support | **ø25x2mm**

	■	+										FI 97	FP 4B	ENOX 77	BLACK RAL 9005 33	WHITE SIGNAL RAL 7043 22	PURE WHITE RAL 9010 67	WHITE BIOV* 88	NOIR BIOV* 89	ANTHRACITE RAL 7024 78	LIGHT GREY RAL 7035 82	CLAY BROWN RAL 8003 80	IVORY RAL 1015 81	DARK BROWN RAL 8707 96
	8/135	CLAQ		35-45	-	-	ø20	-	12	2	18046001	●	●	●	●	●	●	●	●	●	●	-	●	●
	7/135	CLAQ		35-45	-	-	ø20	-	12	2	18046002	●	●	●	●	●	●	●	●	●	●	-	●	●
	-	CLAQ		-	-	-	ø20	-	24	10	06548093	●	●	●	●	●	●	●	●	●	●	-	●	●
	-	-		-	-	-	ø20	-	24	10	06525146	●	●	●	●	●	●	●	●	●	●	-	●	●
	-	-		-	-	-	-	-	24	10	06525145	●	●	●	●	●	●	●	●	●	●	-	●	●
	(8)/135	-		35-45	-	-	ø20	-	4	6	05112233	●	●	●	●	●	●	●	●	●	●	-	●	●
	(7)/135	-		35-45	-	-	ø20	-	4	6	05112234	●	●	●	●	●	●	●	●	●	●	-	●	●
	(6)/135	-		35-45	-	-	ø20	-	4	6	05112235	●	●	●	●	●	●	●	●	●	●	-	●	●
	(5)/135	-		35-45	-	-	ø20	-	4	6	05112259	●	●	●	●	●	●	●	●	●	●	-	●	●
	(4)/135	-		35-45	-	-	ø20	-	4	6	05112260	●	●	●	●	●	●	●	●	●	●	-	●	●

QUADRA

design Ufficio Tecnico Opentech

CE

BRASS | **ZAMAK** | ALU | AISI 316 | AISI 304

MANIGLIA PER PORTE INTERNE – SUPPORTO 55x55x12mm_INTERNAL DOORS HANDLE – SUPPORT 55x55x12mm

CARATTERISTICHE_FEATURES	**FISSAGGIO**_FIXING	**FINITURE**_FINISHES	**OPZIONI**_OPTIONS
CLAQ		L.000h 500h 500h 500h 500h PVD 500h 500h	EN-179 REI-60 IP-65

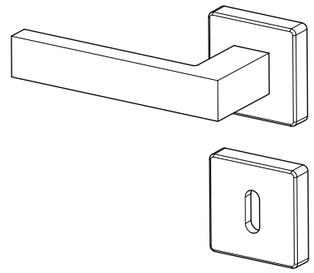

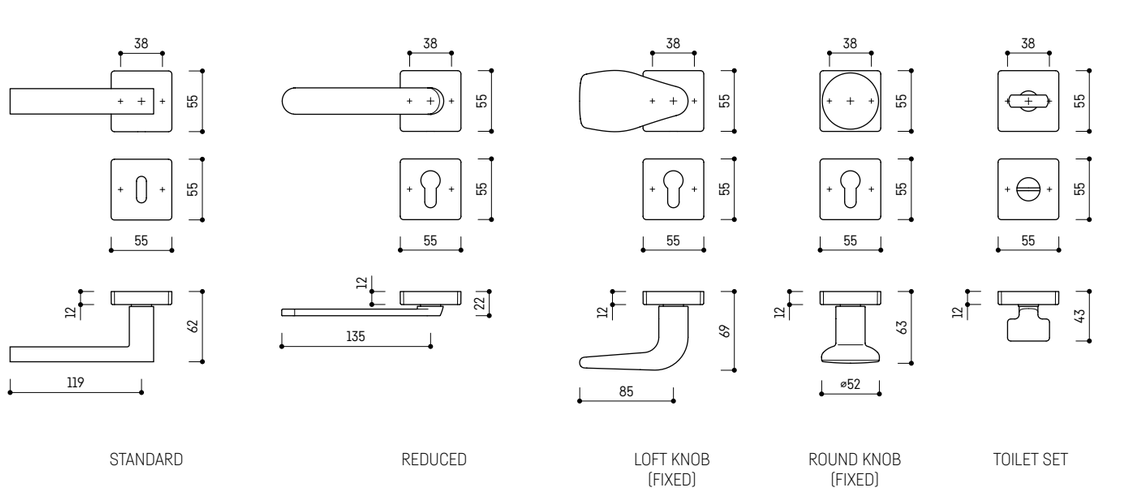

STANDARD | REDUCED | LOFT KNOB (FIXED) | ROUND KNOB (FIXED) | TOILET SET

VERSIONI DISPONIBILI_AVAILABLE VERSIONS

CAPITOLATO_SPECIFICATION

ULTRACYCLE®

ULTRACYCLE® tested for over **1.000.000** cycles - **CLASS 4**

NORMA DIN EN 1906_DIN EN 1906 NORM

4 | 7 | - | 0 | 0 | 4 | 0 | A

Per una descrizione dettagliata di tutte le specifiche tecniche presenti nel prodotto, da impiegare nei capitolati o nelle offerte pubbliche, fate riferimento alla sezione CAPITOLATI_for a detailed description of all the technical informations contained in the product, to be used in the specifications or in public tenders, please refer to the SPECIFICATIONS section.

Descrizione_Description **QUADRA**_design Ufficio Tecnico Opentech

ZAMAK

Supporto_Support **55x55x12mm**

	■	+			X							PLATINUM ABACO* 62	BLACK PEARL ABACO* 50	PLATINUM 03	BLACK PEARL 04	COPPER PEARL 5B	NOIR PEARL 08	COPPER SHINING 52	CRYSTAL SHINING 07	NATURAL GOLD 51	WHITE PEARL 02
	8*		-	3,9x25 3,9x50	38	Ø8	-	12	2	16497001	-	-	●	●	●	●	-	●	●	●
	7*		-	3,9x25 3,9x50	38	Ø8	-	12	2	16497002	-	-	●	●	●	●	-	●	●	●
	8/135		35-45	3,9x50	38	Ø8	-	12	2	16497003	-	-	●	●	●	●	-	●	●	●
	8/135		35-45	3,9x25 3,9x50	38	Ø8	-	12	2	16497004	-	-	●	●	●	●	-	●	●	●
	7/135		35-45	3,9x25 3,9x50	38	Ø8	-	12	2	16497005	-	-	●	●	●	●	-	●	●	●
	8/135		35-65	3,9x25	38	Ø8	-	12	2	16497006	-	-	●	●	●	●	-	●	●	●
	7/135		35-65	3,9x25	38	Ø8	-	12	2	16497007	-	-	●	●	●	●	-	●	●	●
	8/135		35-45	3,9x50	38	Ø8	-	12	2	16497009	-	-	●	●	●	●	-	●	●	●
	8/135		35-45	3,9x25 3,9x50	38	Ø8	-	12	2	16497012	-	-	●	●	●	●	-	●	●	●
	7/135		35-45	3,9x25 3,9x50	38	Ø8	-	12	2	16497013	-	-	●	●	●	●	-	●	●	●
	8/135		35-45	3,9x25	38	-	-	12	2	16497016	-	-	●	●	●	●	-	●	●	●
	7/135		35-45	3,9x25	38	-	-	12	2	16497017	-	-	●	●	●	●	-	●	●	●
	8/135		35-45	3,9x50	38	Ø8	-	12	2	16497008	-	-	●	●	●	●	-	●	●	●
	8/160		60-90	3,9x25 3,9x75 3,9x95	38	Ø8	-	12	2	16497018	-	-	●	●	●	●	-	●	●	●
	8/135		35-45	3,9x25 3,9x50	38	Ø8	-	12	2	16497010	-	-	●	●	●	●	-	●	●	●
	8/160		60-90	3,9x25 3,9x75 3,9x95	38	Ø8	-	12	2	16497019	-	-	●	●	●	●	-	●	●	●
	7/135		35-45	3,9x25 3,9x50	38	Ø8	-	12	2	16497011	-	-	●	●	●	●	-	●	●	●
	7/160		60-90	3,9x25 3,9x75 3,9x95	38	Ø8	-	12	2	16497020	-	-	●	●	●	●	-	●	●	●
	8/135		35-65	3,9x25	38	Ø8	-	12	2	16497014	-	-	●	●	●	●	-	●	●	●
	8/160		60-90	3,9x25	38	Ø8	-	12	2	16497021	-	-	●	●	●	●	-	●	●	●
	7/135		35-65	3,9x25	38	Ø8	-	12	2	16497015	-	-	●	●	●	●	-	●	●	●
	7/160		60-90	3,9x25	38	Ø8	-	12	2	16497022	-	-	●	●	●	●	-	●	●	●
	(8)/135		35-45	3,9x50	38	Ø8	-	4	6	05112182	-	-	●	●	●	●	-	●	●	●

Descrizione_Description **QUADRA**_design Ufficio Tecnico Opentech

ZAMAK

Supporto_Support **55x55x12mm**

	■	+			X							PLATINUM ABACO* 62	BLACK PEARL ABACO* 50	PLATINUM 03	BLACK PEARL 04	COPPER PEARL 5B	NOIR PEARL 08	COPPER SHINING 52	CRYSTAL SHINING 07	NATURAL GOLD 51	WHITE PEARL 02
	(8)/135		35-45	3,9x25 3,9x50	38	Ø8	-	4	6	05112170	-	-	●	●	●	●	-	●	●	●
	(7)/135		35-45	3,9x25 3,9x50	38	Ø8	-	4	6	05112171	-	-	●	●	●	●	-	●	●	●
	(6)/135		35-45	3,9x25 3,9x50	38	Ø8	-	4	6	05112172	-	-	●	●	●	●	-	●	●	●
	(5)/135		35-45	3,9x25 3,9x50	38	Ø8	-	4	6	05112273	-	-	●	●	●	●	-	●	●	●
	(4)/135		35-45	3,9x25 3,9x50	38	Ø8	-	4	6	05112173	-	-	●	●	●	●	-	●	●	●
	8/135		35-45	3,9x25 3,9x50	38	Ø8	-	12	1	19497001	-	-	●	●	●	●	-	●	●	●
	7/135		35-45	3,9x25 3,9x50	38	Ø8	-	12	1	19497002	-	-	●	●	●	●	-	●	●	●
	8/155		50-55	3,9x25 3,9x70	38	Ø8	-	12	1	19497003	-	-	●	●	●	●	-	●	●	●
	7/155		50-55	3,9x25 3,9x70	38	Ø8	-	12	1	19497004	-	-	●	●	●	●	-	●	●	●
	8/165		60-75	3,9x25 3,9x65 3,9x75 3,9x95	38	Ø8	-	12	1	19497005	●	●	●	●	●	●	-	●	●	●
	7/165		60-75	3,9x25 3,9x65 3,9x75 3,9x95	38	Ø8	-	12	1	19497006	●	●	●	●	●	●	-	●	●	●
	8/175		75-90	3,9x25 3,9x65 3,9x75 3,9x95	38	Ø8	-	12	1	19497007	●	●	●	●	●	●	-	●	●	●
	7/175		75-90	3,9x25 3,9x65 3,9x75 3,9x95	38	Ø8	-	12	1	19497008	●	●	●	●	●	●	-	●	●	●

Descrizione_Description **1/2 ferro ancora**_1/2 anchor spindle

STEEL

Supporto_Support -

	■	+			X							MECHANISM 26
	8/60		-	-	-	-	-	-	10	8	06727462	●
	8/70		-	-	-	-	-	-	10	8	06727427	●
	8/80		-	-	-	-	-	-	10	8	06727428	●
	8/90		-	-	-	-	-	-	10	8	06727429	●
	8/100		-	-	-	-	-	-	10	8	06727463	●
	7/60		-	-	-	-	-	-	10	8	06727432	●
	7/70		-	-	-	-	-	-	10	8	06727433	●
	7/80		-	-	-	-	-	-	10	8	06727434	●
	7/90		-	-	-	-	-	-	10	8	06727435	●
	7/100		-	-	-	-	-	-	10	8	06727436	●

Descrizione_Description — **LOFT/ROUND** pomolo fisso_fixed knob

ZAMAK

Supporto_Support — **55x55x12mm**

												PLATINUM ABACO* 62	BLACK PEARL ABACO* 50	PLATINUM 03	BLACK PEARL 04	COPPER PEARL 5B	NOIR PEARL 08	COPPER SHINING 52	CRYSTAL SHINING 07	NATURAL GOLD 51	WHITE PEARL 02
	7* or 8*			-	3,9x25 3,9x50	38	Ø8	-	12	1	17097001	-	-	●	●	●	●	-	●	●	●
	7* or 8*			-	3,9x25 3,9x50	38	Ø8	-	12	1	19697001	-	-	●	●	●	●	-	●	●	●

Descrizione_Description — **1/2 ferro per pomolo fisso**_1/2 fixed knob spindle

STEEL

Supporto_Support — -

											MECHANISM 26
7/90		-	45-55	-	-	-	-	10	8	06727507	●
7/100		-	50-65	-	-	-	-	10	8	06727508	●
7/110		-	60-75	-	-	-	-	10	8	06727509	●
7/120		-	70-85	-	-	-	-	10	8	06727510	●
7/130		-	80-95	-	-	-	-	10	8	06727551	●
7/140		-	90-105	-	-	-	-	10	8	06727552	●
8/90		-	45-55	-	-	-	-	10	8	06727503	●
8/100		-	50-65	-	-	-	-	10	8	06727504	●
8/110		-	60-75	-	-	-	-	10	8	06727505	●
8/120		-	70-85	-	-	-	-	10	8	06727506	●
8/130		-	80-95	-	-	-	-	10	8	06727549	●
8/140		-	90-105	-	-	-	-	10	8	06727550	●

QUADRA

design Ufficio Tecnico Opentech

BRASS · **ZAMAK** · ALU · AISI 316 · AISI 304

MANIGLIA PER PORTE INTERNE – SUPPORTO MINIMAL 25x25x2mm_INTERNAL DOORS HANDLE – SUPPORT MINIMAL 25x25x2mm

CARATTERISTICHE_FEATURES	**FISSAGGIO**_FIXING	**FINITURE**_FINISHES	**OPZIONI**_OPTIONS
CLAC		1.000h · 500h · 500h · 500h · 500h · PVD 500h · 500h	EN-179

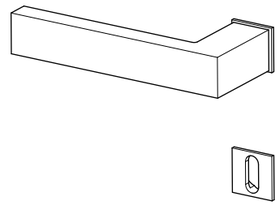

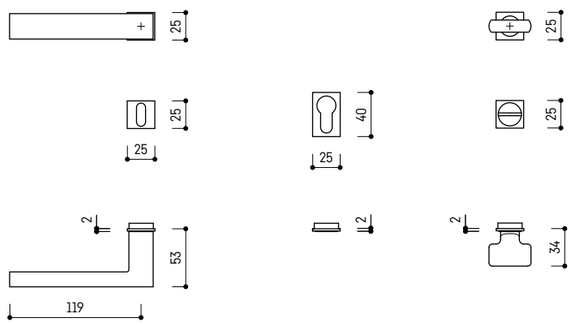

STANDARD — TOILET SET

VERSIONI DISPONIBILI_AVAILABLE VERSIONS

CAPITOLATO_SPECIFICATION

ULTRACYCLE®

ULTRACYCLE® tested for over **1.000.000** cycles - **CLASS 4**

NORMA DIN EN 1906_DIN EN 1906 NORM

4 | 7 | - | 0 | 0 | 4 | 0 | A

Per una descrizione dettagliata di tutte le specifiche tecniche presenti nel prodotto, da impiegare nei capitolati o nelle offerte pubbliche, fate riferimento alla sezione CAPITOLATI_for a detailed description of all the technical informations contained in the product, to be used in the specifications or in public tenders, please refer to the SPECIFICATIONS section.

Descrizione_Description | **QUADRA**_design Ufficio Tecnico Opentech

Supporto_Support | **MINIMAL** 25x25x2mm

											PLATINUM ABACO* 62	BLACK PEARL ABACO* 50	PLATINUM PVD 03	BLACK PEARL PVD 04	COPPER PEARL PVD 5B	NOIR PEARL PVD 08	COPPER SHINING PVD 52	CRYSTAL SHINING PVD 07	NATURAL GOLD PVD 51	WHITE PEARL PVD 02
	8/135	CLAO		35-45	-	-	ø20	-	12	2	16496001	-	-	●	●	●	●	-	●	●	●
	7/135	CLAO		35-45	-	-	ø20	-	12	2	16496002	-	-	●	●	●	●	-	●	●	●
	-	CLAO		-	-	-	ø20	-	24	10	06548092	-	-	●	●	●	●	-	●	●	●
	-	-		-	-	-	ø20	-	24	10	06525072	-	-	●	●	●	●	-	●	●	●
	-	-		-	-	-	-	-	24	10	06525071	-	-	●	●	●	●	-	●	●	●
	(8)/135	-		35-45	-	-	ø20	-	4	6	05112242	-	-	●	●	●	●	-	●	●	●
	(7)/135	-		35-45	-	-	ø20	-	4	6	05112243	-	-	●	●	●	●	-	●	●	●
	(6)/135	-		35-45	-	-	ø20	-	4	6	05112244	-	-	●	●	●	●	-	●	●	●
	(5)/135	-		35-45	-	-	ø20	-	4	6	05112267	-	-	●	●	●	●	-	●	●	●
	(4)/135	-		35-45	-	-	ø20	-	4	6	05112268	-	-	●	●	●	●	-	●	●	●

QUADRA

design Ufficio Tecnico Opentech

CE

BRASS | **ZAMAK** | ALU | AISI 316 | AISI 304

MANIGLIA PER PORTE INTERNE – SUPPORTO EASYPIN 55x55x2mm_INTERNAL DOORS HANDLE – SUPPORT EASYPIN 55x55x2mm

CARATTERISTICHE_FEATURES	**FISSAGGIO**_FIXING	**FINITURE**_FINISHES	**OPZIONI**_OPTIONS
CLAO		1.000h | 500h | 500h | 500h | 500h | PVD 500h | 500h	EN-179

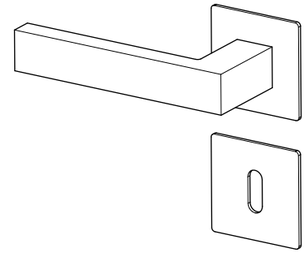

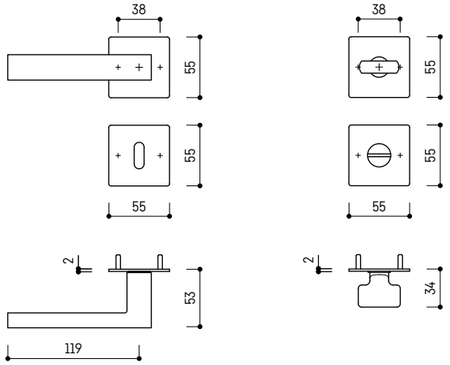

STANDARD TOILET SET

VERSIONI DISPONIBILI_AVAILABLE VERSIONS

CAPITOLATO_SPECIFICATION

ULTRACYCLE®

ULTRACYCLE® tested for over **1.000.000** cycles - **CLASS 4**

NORMA DIN EN 1906_DIN EN 1906 NORM

4 | 7 | - | 0 | 0 | 4 | 0 | A

Per una descrizione dettagliata di tutte le specifiche tecniche presenti nel prodotto, da impiegare nei capitolati o nelle offerte pubbliche, fate riferimento alla sezione CAPITOLATI_for a detailed description of all the technical informations contained in the product, to be used in the specifications or in public tenders, please refer to the SPECIFICATIONS section.

Descrizione_Description | **QUADRA**_design Ufficio Tecnico Opentech

ZAMAK

Supporto_Support | **EASYPIN 55x55x2mm**

	■	+										PLATINUM ABACO* 62	BLACK PEARL ABACO* 50	PLATINUM 03	BLACK PEARL 04	COPPER PEARL 5B	NOIR PEARL 08	COPPER SHINING 52	CRYSTAL SHINING 07	NATURAL GOLD 51	WHITE PEARL 02
	8/135	CLAQ		35-45	-	38	Ø7	-	12	2	16461001	-	-	●	●	●	●	-	●	●	●
	7/135	CLAQ		35-45	-	38	Ø7	-	12	2	16461002	-	-	●	●	●	●	-	●	●	●
	-	CLAQ		-	-	38	Ø7	-	24	10	06548096	-	-	●	●	●	●	-	●	●	●
	-	-		-	-	38	Ø7	-	24	10	06525175	-	-	●	●	●	●	-	●	●	●
	-	-		-	-	38	Ø7	-	24	10	06525174	-	-	●	●	●	●	-	●	●	●
	(8)/135	-		35-45	-	38	Ø7	-	4	6	05112252	-	-	●	●	●	●	-	●	●	●
	(7)/135	-		35-45	-	38	Ø7	-	4	6	05112269	-	-	●	●	●	●	-	●	●	●
	(6)/135	-		35-45	-	38	Ø7	-	4	6	05112270	-	-	●	●	●	●	-	●	●	●
	(5)/135	-		35-45	-	38	Ø7	-	4	6	05112271	-	-	●	●	●	●	-	●	●	●
	(4)/135	-		35-45	-	38	Ø7	-	4	6	05112272	-	-	●	●	●	●	-	●	●	●

CLOE

design Leo De Carlo

CE

BRASS | **ZAMAK** | ALU | AISI 316 | AISI 304

MANIGLIA PER PORTE INTERNE – SUPPORTO ø52x10mm_INTERNAL DOORS HANDLE – SUPPORT ø52x10mm

CARATTERISTICHE_FEATURES	**FISSAGGIO**_FIXING	**FINITURE**_FINISHES									**OPZIONI**_OPTIONS			
		L.000h	304 500h	316 500h	500h	500h	PVD 500h	500h		EN-179	REI-60	IP-65
CLAQ												

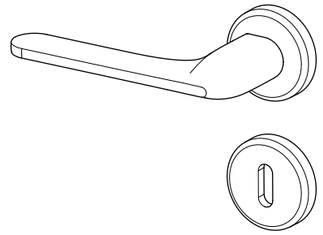

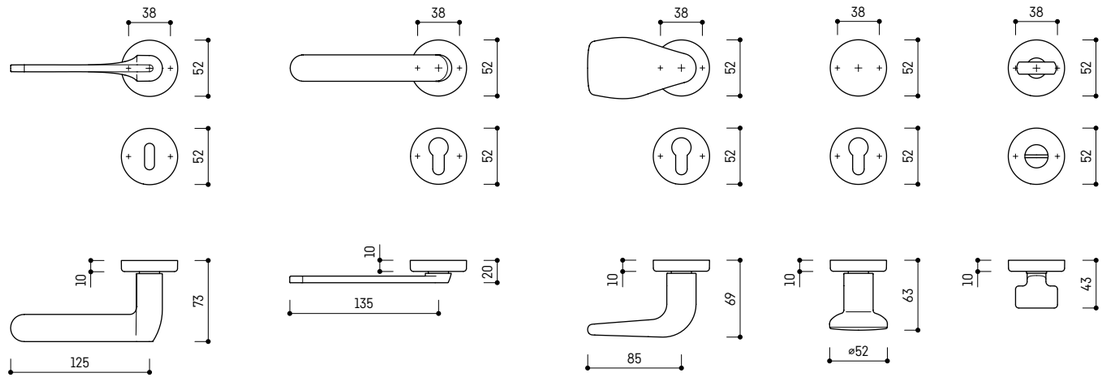

STANDARD | REDUCED | LOFT KNOB (FIXED) | ROUND KNOB (FIXED) | TOILET SET

VERSIONI DISPONIBILI_AVAILABLE VERSIONS

CAPITOLATO_SPECIFICATION

ULTRACYCLE®

ULTRACYCLE® tested for over **1.000.000** cycles - **CLASS 4**

NORMA DIN EN 1906_DIN EN 1906 NORM

4 | 7 | - | 0 | 0 | 4 | 0 | A

Per una descrizione dettagliata di tutte le specifiche tecniche presenti nel prodotto, da impiegare nei capitolati o nelle offerte pubbliche, fate riferimento alla sezione CAPITOLATI_for a detailed description of all the technical informations contained in the product, to be used in the specifications or in public tenders, please refer to the SPECIFICATIONS section.

Descrizione_Description CLOE_design Leo De Carlo

ZAMAK

Supporto_Support ø52x10mm

■	+			X							PLATINUM ABACO* 62	BLACK PEARL ABACO* 50	PLATINUM 03	BLACK PEARL 04	COPPER PEARL 5B	NOIR PEARL 08	COPPER SHINING 52	CRYSTAL SHINING 07	NATURAL GOLD 51	WHITE PEARL 02
8*		-	3,9x25 3,9x50	38	Ø8	-	12	2	11702032	-	-	●	●	●	●	-	●	●	●
7*		-	3,9x25 3,9x50	38	Ø8	-	12	2	11702033	-	-	●	●	●	●	-	●	●	●
8/135		35-45	3,9x50	38	Ø8	-	12	2	11702034	-	-	●	●	●	●	-	●	●	●
8/135		35-45	3,9x25 3,9x50	38	Ø8	-	12	2	11702035	-	-	●	●	●	●	-	●	●	●
7/135		35-45	3,9x25 3,9x50	38	Ø8	-	12	2	11702031	-	-	●	●	●	●	-	●	●	●
8/135		35-65	3,9x25	38	Ø8	-	12	2	11702036	-	-	●	●	●	●	-	●	●	●
7/135		35-65	3,9x25	38	Ø8	-	12	2	11702037	-	-	●	●	●	●	-	●	●	●
8/135		35-45	3,9x50	38	Ø8	-	12	2	11702039	-	-	●	●	●	●	-	●	●	●
8/135		35-45	3,9x25 3,9x50	38	Ø8	-	12	2	11702041	-	-	●	●	●	●	-	●	●	●
7/135		35-45	3,9x25 3,9x50	38	Ø8	-	12	2	11702002	-	-	●	●	●	●	-	●	●	●
8/135		35-45	3,9x25	38	-	-	12	2	11702044	-	-	●	●	●	●	-	●	●	●
7/135		35-45	3,9x25	38	-	-	12	2	11702045	-	-	●	●	●	●	-	●	●	●
8/135		35-45	3,9x50	38	Ø8	-	12	2	11702038	-	-	●	●	●	●	-	●	●	●
8/160		60-90	3,9x25 3,9x75 3,9x95	38	Ø8	-	12	2	11702046	-	-	●	●	●	●	-	●	●	●
8/135		35-45	3,9x25 3,9x50	38	Ø8	-	12	2	11702040	-	-	●	●	●	●	-	●	●	●
8/160		60-90	3,9x25 3,9x75 3,9x95	38	Ø8	-	12	2	11702047	-	-	●	●	●	●	-	●	●	●
7/135		35-45	3,9x25 3,9x50	38	Ø8	-	12	2	11702003	-	-	●	●	●	●	-	●	●	●
7/160		60-90	3,9x25 3,9x75 3,9x95	38	Ø8	-	12	2	11702048	-	-	●	●	●	●	-	●	●	●
8/135		35-65	3,9x25	38	Ø8	-	12	2	11702042	-	-	●	●	●	●	-	●	●	●
8/160		60-90	3,9x25	38	Ø8	-	12	2	11702049	-	-	●	●	●	●	-	●	●	●
7/135		35-65	3,9x25	38	Ø8	-	12	2	11702043	-	-	●	●	●	●	-	●	●	●
7/160		60-90	3,9x25	38	Ø8	-	12	2	11702050	-	-	●	●	●	●	-	●	●	●
(8)/135		35-45	3,9x50	38	Ø8	-	4	6	05112122	-	-	●	●	●	●	-	●	●	●

Descrizione_Description CLOE_design Leo De Carlo

ZAMAK

Supporto_Support ø52x10mm

■	+			X							PLATINUM ABACO* 62	BLACK PEARL ABACO* 50	PLATINUM 03	BLACK PEARL 04	COPPER PEARL 5B	NOIR PEARL 08	COPPER SHINING 52	CRYSTAL SHINING 07	NATURAL GOLD 51	WHITE PEARL 02
(8)/135		35-45	3,9x25 3,9x50	38	Ø8	-	4	6	05112110	-	-	●	●	●	●	-	●	●	●
(7)/135		35-45	3,9x25 3,9x50	38	Ø8	-	4	6	05112111	-	-	●	●	●	●	-	●	●	●
(6)/135		35-45	3,9x25 3,9x50	38	Ø8	-	4	6	05112112	-	-	●	●	●	●	-	●	●	●
(5)/135		35-45	3,9x25 3,9x50	38	Ø8	-	4	6	05112254	-	-	●	●	●	●	-	●	●	●
(4)/135		35-45	3,9x25 3,9x50	38	Ø8	-	4	6	05112113	-	-	●	●	●	●	-	●	●	●
8/135		35-45	3,9x25 3,9x50	38	Ø8	-	12	1	19402005	-	-	●	●	●	●	-	●	●	●
7/135		35-45	3,9x25 3,9x50	38	Ø8	-	12	1	19402006	-	-	●	●	●	●	-	●	●	●
8/155		50-55	3,9x25 3,9x70	38	Ø8	-	12	1	19402007	-	-	●	●	●	●	-	●	●	●
7/155		50-55	3,9x25 3,9x70	38	Ø8	-	12	1	19402008	-	-	●	●	●	●	-	●	●	●
8/165		60-75	3,9x25 3,9x65 3,9x75 3,9x95	38	Ø8	-	12	1	19402009	●	●	●	●	●	●	-	●	●	●
7/165		60-75	3,9x25 3,9x65 3,9x75 3,9x95	38	Ø8	-	12	1	19402010	●	●	●	●	●	●	-	●	●	●
8/175		75-90	3,9x25 3,9x65 3,9x75 3,9x95	38	Ø8	-	12	1	19402011	●	●	●	●	●	●	-	●	●	●
7/175		75-90	3,9x25 3,9x65 3,9x75 3,9x95	38	Ø8	-	12	1	19402012	●	●	●	●	●	●	-	●	●	●

Descrizione_Description **1/2 ferro ancora**_1/2 anchor spindle

STEEL

Supporto_Support -

■	+			X							MECHANISM 26
8/60		-	-	-	-	-	-	10	8	06727462	●
8/70		-	-	-	-	-	-	10	8	06727427	●
8/80		-	-	-	-	-	-	10	8	06727428	●
8/90		-	-	-	-	-	-	10	8	06727429	●
8/100		-	-	-	-	-	-	10	8	06727463	●
7/60		-	-	-	-	-	-	10	8	06727432	●
7/70		-	-	-	-	-	-	10	8	06727433	●
7/80		-	-	-	-	-	-	10	8	06727434	●
7/90		-	-	-	-	-	-	10	8	06727435	●
7/100		-	-	-	-	-	-	10	8	06727436	●

Descrizione_Description — **LOFT/ROUND** pomolo fisso_fixed knob

Supporto_Support — ø52x10mm

■	+										PLATINUM ABACO® 62	BLACK PEARL ABACO® 50	PLATINUM 03	BLACK PEARL 04	COPPER PEARL 5B	NOIR PEARL 08	COPPER SHINING 52	CRYSTAL SHINING 07	NATURAL GOLD 51	WHITE PEARL 02
7" or 8"			-	3,9x25 3,9x50	38	Ø8	-	12	1	17002001	-	-	●	●	●	●	-	●	●	●
7" or 8"			-	3,9x25 3,9x50	38	Ø8	-	12	1	19602001	-	-	●	●	●	●	-	●	●	●

Descrizione_Description — **1/2 ferro per pomolo fisso**_1/2 fixed knob spindle

Supporto_Support — -

■	+										MECHANISM 26
7/90		-	45-55	-	-	-	-	10	8	06727507	●
7/100		-	50-65	-	-	-	-	10	8	06727508	●
7/110		-	60-75	-	-	-	-	10	8	06727509	●
7/120		-	70-85	-	-	-	-	10	8	06727510	●
7/130		-	80-95	-	-	-	-	10	8	06727551	●
7/140		-	90-105	-	-	-	-	10	8	06727552	●
8/90		-	45-55	-	-	-	-	10	8	06727503	●
8/100		-	50-65	-	-	-	-	10	8	06727504	●
8/110		-	60-75	-	-	-	-	10	8	06727505	●
8/120		-	70-85	-	-	-	-	10	8	06727506	●
8/130		-	80-95	-	-	-	-	10	8	06727549	●
8/140		-	90-105	-	-	-	-	10	8	06727550	●

CLOE

design Leo De Carlo

CE

BRASS · **ZAMAK** · ALU · AISI 316 · AISI 304

MANIGLIA PER PORTE INTERNE – SUPPORTO ø45X8mm_INTERNAL DOORS HANDLE – SUPPORT ø45X8mm

CARATTERISTICHE_FEATURES	**FISSAGGIO**_FIXING	**FINITURE**_FINISHES										**OPZIONI**_OPTIONS			
		1.000h	500h	500h	500h	500h	PVD 500h	500h							
													EN-179	REI-60	IP-65

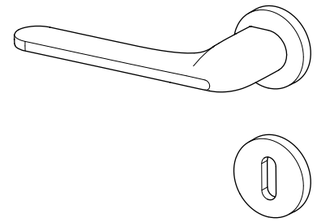

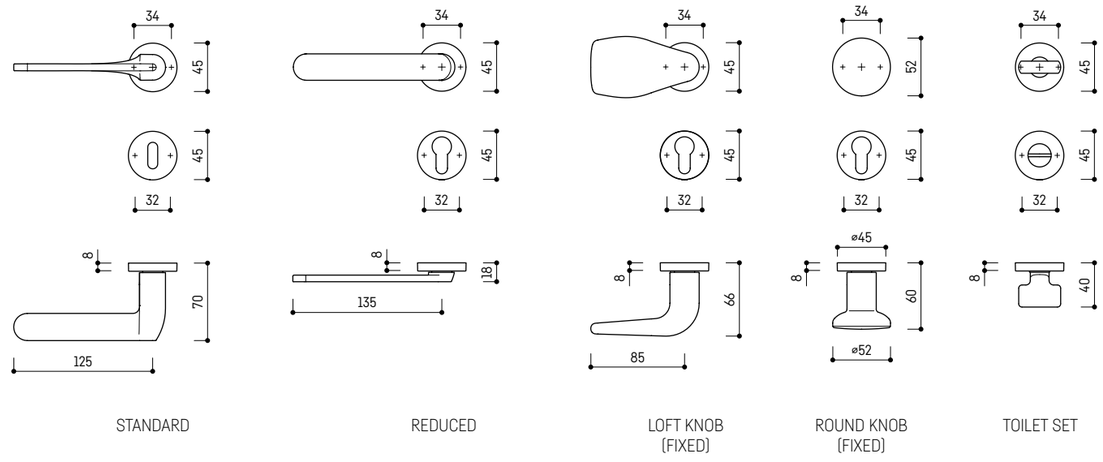

STANDARD · REDUCED · LOFT KNOB (FIXED) · ROUND KNOB (FIXED) · TOILET SET

VERSIONI DISPONIBILI_AVAILABLE VERSIONS

CAPITOLATO_SPECIFICATION

ULTRACYCLE®

ULTRACYCLE® tested for over **1.000.000** cycles - **CLASS 4**

NORMA DIN EN 1906_DIN EN 1906 NORM

4 | 7 | - | 0 | 0 | 4 | 0 | A

Per una descrizione dettagliata di tutte le specifiche tecniche presenti nel prodotto, da impiegare nei capitolati o nelle offerte pubbliche, fate riferimento alla sezione CAPITOLATI_for a detailed description of all the technical informations contained in the product, to be used in the specifications or in public tenders, please refer to the SPECIFICATIONS section.

Descrizione_Description **CLOE**_design Leo De Carlo

ZAMAK

Supporto_Support **ø45X8mm**

	■	+										PLATINUM ABACO® 62	BLACK PEARL ABACO® 50	PLATINUM PVD 03	BLACK PEARL PVD 04	COPPER PEARL PVD 5B	NOIR PEARL PVD 08	COPPER SHINING PVD 52	CRYSTAL SHINING PVD 07	NATURAL GOLD PVD 51	WHITE PEARL PVD 02
	8*	CLAC		-	3,9x25	34/32	-	-	12	2	11777001	-	-	●	●	●	●	-	●	●	●
	7*	CLAC		-	3,9x25	34/32	-	-	12	2	11777002	-	-	●	●	●	●	-	●	●	●
	8/135	CLAC		35-45	3,9x25	34	-	-	12	2	11777003	-	-	●	●	●	●	-	●	●	●
	7/135	CLAC		35-45	3,9x25	34	-	-	12	2	11777004	-	-	●	●	●	●	-	●	●	●
	8/135	CLAC		35-45	3,9x25	34/32	-	-	12	2	11777007	-	-	●	●	●	●	-	●	●	●
	7/135	CLAC		35-45	3,9x25	34/32	-	-	12	2	11777008	-	-	●	●	●	●	-	●	●	●
	8/135	CLAC		35-65	3,9x25	34/32	-	-	12	2	11777005	-	-	●	●	●	●	-	●	●	●
	7/135	CLAC		35-65	3,9x25	34/32	-	-	12	2	11777006	-	-	●	●	●	●	-	●	●	●
	8/160	CLAC		60-90	3,9x25	34/32	-	-	12	2	11777009	-	-	●	●	●	●	-	●	●	●
	7/160	CLAC		60-90	3,9x25	34/32	-	-	12	2	11777010	-	-	●	●	●	●	-	●	●	●
	(8)/135	-		35-45	3,9x25	34/32	-	-	4	6	05112197	-	-	●	●	●	●	-	●	●	●
	(7)/135	-		35-45	3,9x25	34/32	-	-	4	6	05112198	-	-	●	●	●	●	-	●	●	●
	(6)/135	-		35-45	3,9x25	34/32	-	-	4	6	05112199	-	-	●	●	●	●	-	●	●	●
	(5)/135	-		35-45	3,9x25	34/32	-	-	4	6	05112257	-	-	●	●	●	●	-	●	●	●
	(4)/135	-		35-45	3,9x25	34/32	-	-	4	6	05112200	-	-	●	●	●	●	-	●	●	●
	8/135	CLAC		35-45	3,9x25	34	-	-	12	1	19477001	-	-	●	●	●	●	-	●	●	●
	7/135	CLAC		35-45	3,9x25	34	-	-	12	1	19477002	-	-	●	●	●	●	-	●	●	●
	8/155	CLAC		50-55	3,9x25	34	-	-	12	1	19477003	-	-	●	●	●	●	-	●	●	●
	7/155	CLAC		50-55	3,9x25	34	-	-	12	1	19497004	-	-	●	●	●	●	-	●	●	●
	8/165	CLAC		60-75	3,9x25	34	-	-	12	1	19477005	-	-	●	●	●	●	-	●	●	●
	7/165	CLAC		60-75	3,9x25	34	-	-	12	1	19477006	-	-	●	●	●	●	-	●	●	●
	8/175	CLAC		75-90	3,9x25	34	-	-	12	1	19477007	-	-	●	●	●	●	-	●	●	●
	7/175	CLAC		75-90	3,9x25	34	-	-	12	1	19477008	-	-	●	●	●	●	-	●	●	●

Descrizione_Description **1/2 ferro ancora**_1/2 anchor spindle

STEEL

Supporto_Support -

	■	+										MECHANISM 26
	8/60	CLAC CC	-	-	-	-	-	-	10	8	06727462	●
	8/70	CLAC CC	-	-	-	-	-	-	10	8	06727427	●
	8/80	CLAC CC	-	-	-	-	-	-	10	8	06727428	●
	8/90	CLAC CC	-	-	-	-	-	-	10	8	06727429	●
	8/100	CLAC CC	-	-	-	-	-	-	10	8	06727463	●
	7/60	CLAC CC	-	-	-	-	-	-	10	8	06727432	●
	7/70	CLAC CC	-	-	-	-	-	-	10	8	06727433	●
	7/80	CLAC CC	-	-	-	-	-	-	10	8	06727434	●
	7/90	CLAC CC	-	-	-	-	-	-	10	8	06727435	●
	7/100	CLAC CC	-	-	-	-	-	-	10	8	06727436	●

Descrizione_Description **LOFT/ROUND** pomolo fisso_fixed knob

ZAMAK

Supporto_Support **ø45X8mm**

	■	+										PLATINUM ABACO® 62	BLACK PEARL ABACO® 50	PLATINUM PVD 03	BLACK PEARL PVD 04	COPPER PEARL PVD 5B	NOIR PEARL PVD 08	COPPER SHINING PVD 52	CRYSTAL SHINING PVD 07	NATURAL GOLD PVD 51	WHITE PEARL PVD 02
	7* or 8*	CLAC		-	3,9x25	34	-	-	12	1	17077001	-	-	●	●	●	●	-	●	●	●
	7* or 8*	CLAC		-	3,9x25	34	-	-	12	1	19677001	-	-	●	●	●	●	-	●	●	●

Descrizione_Description **1/2 ferro per pomolo fisso**_1/2 fixed knob spindle

STEEL

Supporto_Support -

	■	+										MECHANISM 26
	7/90	CLAC CC	-	45-55	-	-	-	-	10	8	06727507	●
	7/100	CLAC CC	-	50-65	-	-	-	-	10	8	06727508	●
	7/110	CLAC CC	-	60-75	-	-	-	-	10	8	06727509	●
	7/120	CLAC CC	-	70-85	-	-	-	-	10	8	06727510	●
	7/130	CLAC CC	-	80-95	-	-	-	-	10	8	06727551	●
	7/140	CLAC CC	-	90-105	-	-	-	-	10	8	06727552	●
	8/90	CLAC CC	-	45-55	-	-	-	-	10	8	06727503	●
	8/100	CLAC CC	-	50-65	-	-	-	-	10	8	06727504	●
	8/110	CLAC CC	-	60-75	-	-	-	-	10	8	06727505	●
	8/120	CLAC CC	-	70-85	-	-	-	-	10	8	06727506	●
	8/130	CLAC CC	-	80-95	-	-	-	-	10	8	06727549	●
	8/140	CLAC CC	-	90-105	-	-	-	-	10	8	06727550	●

CLOE

design Leo De Carlo

BRASS | **ZAMAK** | ALU | AISI 316 | AISI 304

MANIGLIA PER PORTE INTERNE – SUPPORTO MINIMAL ø25x2mm_INTERNAL DOORS HANDLE – SUPPORT MINIMAL ø25x2mm

CARATTERISTICHE_FEATURES	**FISSAGGIO**_FIXING	**FINITURE**_FINISHES	**OPZIONI**_OPTIONS

1.000h	500h	500h	500h	500h	500h	500h			
					PVD			EN-179	REI-60	IP-65

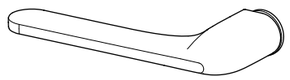

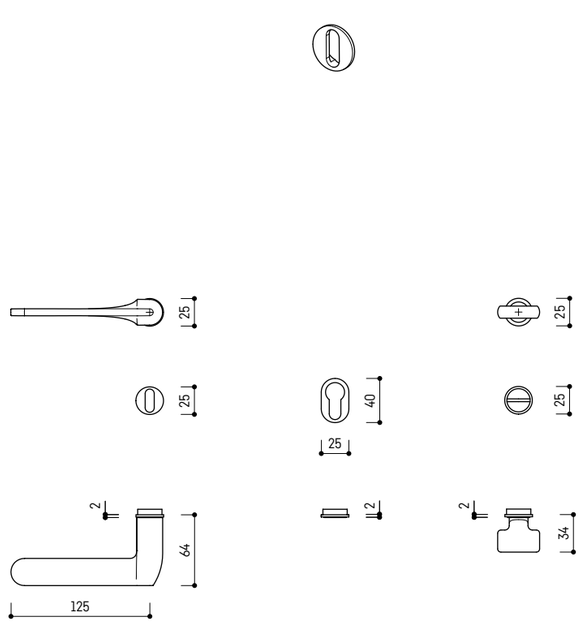

STANDARD TOILET SET

VERSIONI DISPONIBILI_AVAILABLE VERSIONS

CAPITOLATO_SPECIFICATION

ULTRACYCLE®

ULTRACYCLE® tested for over **1.000.000** cycles - **CLASS 4**

NORMA DIN EN 1906_DIN EN 1906 NORM

4 | 7 | - | 0 | 0 | 4 | 0 | A

Per una descrizione dettagliata di tutte le specifiche tecniche presenti nel prodotto, da impiegare nei capitolati o nelle offerte pubbliche, fate riferimento alla sezione CAPITOLATI_for a detailed description of all the technical informations contained in the product, to be used in the specifications or in public tenders, please refer to the SPECIFICATIONS section.

Descrizione_Description: **CLOE**_design Leo De Carlo

ZAMAK

Supporto_Support: **MINIMAL ø25x2mm**

■	+			X							PLATINUM ABACO® 62	BLACK PEARL ABACO® 50	PLATINUM 03	BLACK PEARL 04	COPPER PEARL 5B	NOIR PEARL 08	COPPER SHINING 52	CRYSTAL SHINING 07	NATURAL GOLD 51	WHITE PEARL 02
8/135	CLAQ		35-45	-	-	ø20	-	12	2	11746001	-	-	●	●	●	●	-	●	●	●
7/135	CLAQ		35-45	-	-	ø20	-	12	2	11746002	-	-	●	●	●	●	-	●	●	●
-	CLAQ		-	-	-	ø20	-	24	10	06548093	-	-	●	●	●	●	-	●	●	●
-	-		-	-	-	ø20	-	24	10	06525146	-	-	●	●	●	●	-	●	●	●
-	-		-	-	-	-	-	24	10	06525145	-	-	●	●	●	●	-	●	●	●
(8)/135	-		35-45	-	-	ø20	-	4	6	05112233	-	-	●	●	●	●	-	●	●	●
(7)/135	-		35-45	-	-	ø20	-	4	6	05112234	-	-	●	●	●	●	-	●	●	●
(6)/135	-		35-45	-	-	ø20	-	4	6	05112235	-	-	●	●	●	●	-	●	●	●
(5)/135	-		35-45	-	-	ø20	-	4	6	05112259	-	-	●	●	●	●	-	●	●	●
(4)/135	-		35-45	-	-	ø20	-	4	6	05112260	-	-	●	●	●	●	-	●	●	●

CLOE

design Leo De Carlo

BRASS | **ZAMAK** | ALU | AISI 316 | AISI 304

MANIGLIA PER PORTE INTERNE – SUPPORTO EASYPIN ø55x2mm INTERNAL DOORS HANDLE – SUPPORT EASYPIN ø55x2mm

CARATTERISTICHE_FEATURES	**FISSAGGIO**_FIXING	**FINITURE**_FINISHES	**OPZIONI**_OPTIONS
CLAQ		1.000h · 304 500h · 316 500h · 500h · 500h · **PVD 500h** · **500h**	**EN-179**

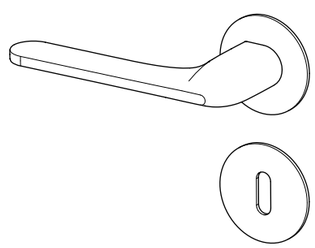

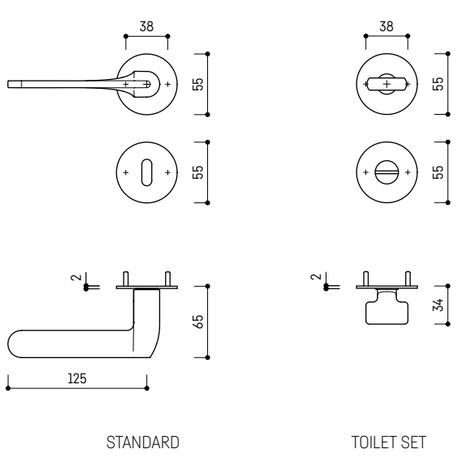

STANDARD TOILET SET

VERSIONI DISPONIBILI_AVAILABLE VERSIONS

CAPITOLATO_SPECIFICATION

ULTRACYCLE®

ULTRACYCLE® tested for over **1.000.000** cycles - **CLASS 4**

NORMA DIN EN 1906_DIN EN 1906 NORM

4 | 7 | - | 0 | 0 | 4 | 0 | A

Per una descrizione dettagliata di tutte le specifiche tecniche presenti nel prodotto, da impiegare nei capitolati o nelle offerte pubbliche, fate riferimento alla sezione CAPITOLATI_for a detailed description of all the technical informations contained in the product, to be used in the specifications or in public tenders, please refer to the SPECIFICATIONS section.

Descrizione_Description: CLOE_design Leo De Carlo

ZAMAK

Supporto_Support: EASYPIN ø55x2mm

■	+	x	PLATINUM ABACO® 62	BLACK PEARL ABACO® 50	PLATINUM 03	BLACK PEARL 04	COPPER PEARL 5B	NOIR PEARL 08	COPPER SHINING 52	CRYSTAL SHINING 07	NATURAL GOLD 51	WHITE PEARL 02
8/135	CLAQ	35-45	-	38	Ø7	-	12	2	11759001	-	-	●	●	●	●	-	●	●	●
7/135	CLAQ	35-45	-	38	Ø7	-	12	2	11759002	-	-	●	●	●	●	-	●	●	●
-	CLAQ	-	-	38	Ø7	-	24	10	06548077	-	-	●	●	●	●	-	●	●	●
-	-	-	-	38	Ø7	-	24	10	06525121	-	-	●	●	●	●	-	●	●	●
-	-	-	-	38	Ø7	-	24	10	06525120	-	-	●	●	●	●	-	●	●	●
(8)/135	-	35-45	-	38	Ø7	-	4	6	05112251	-	-	●	●	●	●	-	●	●	●
(7)/135	-	35-45	-	38	Ø7	-	4	6	05112261	-	-	●	●	●	●	-	●	●	●
(6)/135	-	35-45	-	38	Ø7	-	4	6	05112262	-	-	●	●	●	●	-	●	●	●
(5)/135	-	35-45	-	38	Ø7	-	4	6	05112263	-	-	●	●	●	●	-	●	●	●
(4)/135	-	35-45	-	38	Ø7	-	4	6	05112264	-	-	●	●	●	●	-	●	●	●

CLOE

design Leo De Carlo

BRASS | **ZAMAK** | ALU | AISI 316 | AISI 304

MANIGLIA PER PORTE INTERNE – SUPPORTO 40x235x9mm_INTERNAL DOORS HANDLE – SUPPORT 40x235x9mm

CARATTERISTICHE_FEATURES	**FISSAGGIO**_FIXING	**FINITURE**_FINISHES	**OPZIONI**_OPTIONS
CLAQ		1.000h; 304 500h; 316 500h; 500h; 500h; PVD 500h; 500h	EN-179

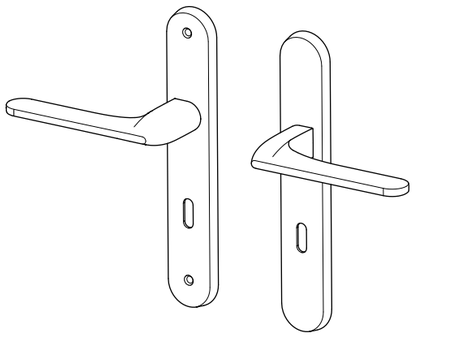

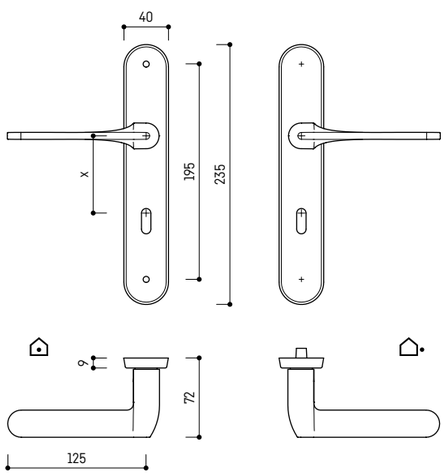

VERSIONI DISPONIBILI_AVAILABLE VERSIONS

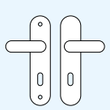
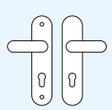
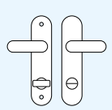

CAPITOLATO_SPECIFICATION

ULTRACYCLE®

ULTRACYCLE® tested for over
1.000.000 cycles - **CLASS 4**

NORMA DIN EN 1906_DIN EN 1906 NORM

4 | 7 | - | 0 | 0 | 4 | 0 | A

Per una descrizione dettagliata di tutte le specifiche tecniche presenti nel prodotto, da impiegare nei capitolati o nelle offerte pubbliche, fate riferimento alla sezione CAPITOLATI_for a detailed description of all the technical informations contained in the product, to be used in the specifications or in public tenders, please refer to the SPECIFICATIONS section.

Descrizione_Description: **CLOE**_design Leo De Carlo

ZAMAK

Supporto_Support: **40x235x9mm**

												PLATINUM ABACO* 62	BLACK PEARL ABACO* 50	PLATINUM PVD 03	BLACK PEARL PVD 04	COPPER PEARL PVD 5B	NOIR PEARL PVD 08	COPPER SHINING PVD 52	CRYSTAL SHINING PVD 07	NATURAL GOLD PVD 51	WHITE PEARL PVD 02
	8/135	CLAQ		35-55	M4x75 SEC	195	Ø10	72	12	2	11701047	-	-	●	●	●	●	-	●	●	●
	7/135	CLAQ		35-55	M4x75 SEC	195	Ø10	70	12	2	11701050	-	-	●	●	●	●	-	●	●	●
	8/135	CLAQ		35-55	M4x75 SEC	195	Ø10	72	12	2	11701046	-	-	●	●	●	●	-	●	●	●
	7/135	CLAQ		35-55	M4x75 SEC	195	Ø10	70	12	2	11701049	-	-	●	●	●	●	-	●	●	●
	8(8)/135	CLAQ		35-55	M4x75 SEC	195	Ø10	78	12	2	11701048	-	-	●	●	●	●	-	●	●	●
	7(6)/135	CLAQ		35-55	M4x75 SEC	195	Ø10	70	12	2	11701051	-	-	●	●	●	●	-	●	●	●

SOFIA

design Leo De Carlo

CE

BRASS · **ZAMAK** · ALU · AISI 316 · AISI 304

MANIGLIA PER PORTE INTERNE – SUPPORTO ø52x10mm INTERNAL DOORS HANDLE – SUPPORT ø52x10mm

CARATTERISTICHE FEATURES	**FISSAGGIO** FIXING	**FINITURE** FINISHES	**OPZIONI** OPTIONS
CLIAQ · R · molla · 4 fori	2 viti · 1 vite · 1 vite	1.000h · 304 500h · 316 500h · 500h · 500h · PVD 500h · 500h	EN-179 · REI-60 · IP-65

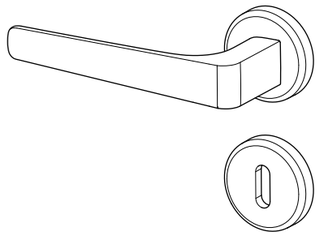

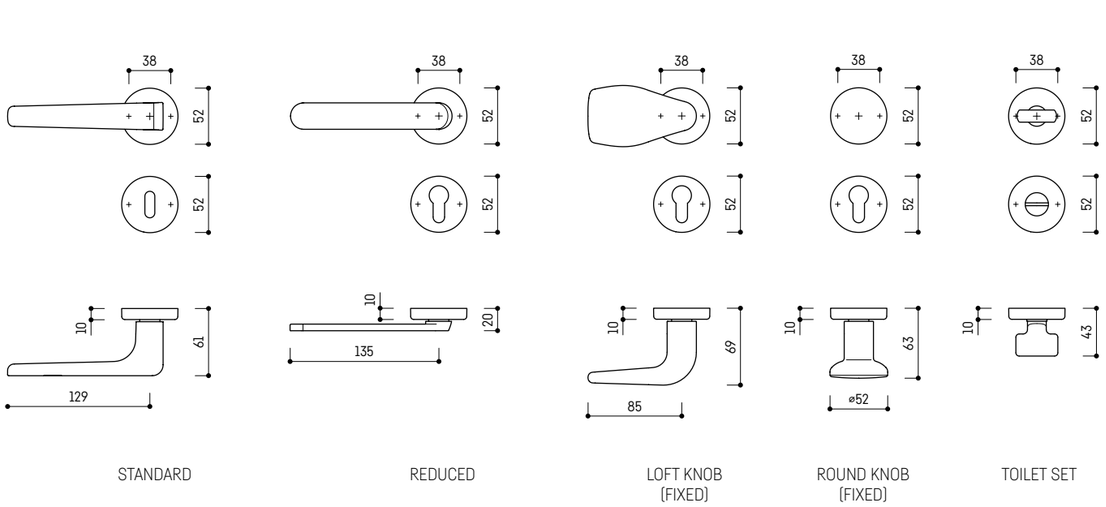

STANDARD · REDUCED · LOFT KNOB (FIXED) · ROUND KNOB (FIXED) · TOILET SET

VERSIONI DISPONIBILI AVAILABLE VERSIONS

CAPITOLATO SPECIFICATION

ULTRACYCLE®

ULTRACYCLE® tested for over **1.000.000** cycles - **CLASS 4**

NORMA DIN EN 1906 DIN EN 1906 NORM

4 | 7 | - | 0 | 0 | 4 | 0 | A

Per una descrizione dettagliata di tutte le specifiche tecniche presenti nel prodotto, da impiegare nei capitolati o nelle offerte pubbliche, fate riferimento alla sezione CAPITOLATI for a detailed description of all the technical informations contained in the product, to be used in the specifications or in public tenders, please refer to the SPECIFICATIONS section.

Descrizione Description: **SOFIA** design Leo De Carlo

Supporto Support: ZAMAK

Supporto Support: ø52x10mm

■	+	X	PLATINUM ABACO* 62	BLACK PEARL ABACO* 50	PLATINUM 03	BLACK PEARL 04	COPPER PEARL 5B	NOIR PEARL 08	COPPER SHINING 52	CRYSTAL SHINING 07	NATURAL GOLD 51	WHITE PEARL 02
8*	35-45	3,9x25 3,9x50	-	-	●	●	●	●	-	●	●	●
7*	-	3,9x25 3,9x50	-	-	●	●	●	●	-	●	●	●
8/135	35-45	3,9x50	-	-	●	●	●	●	-	●	●	●
8/135	35-45	3,9x25 3,9x50	-	-	●	●	●	●	-	●	●	●
7/135	35-45	3,9x25 3,9x50	-	-	●	●	●	●	-	●	●	●
8/135	35-65	3,9x25	-	-	●	●	●	●	-	●	●	●
7/135	35-65	3,9x25	-	-	●	●	●	●	-	●	●	●
8/135	35-45	3,9x50	-	-	●	●	●	●	-	●	●	●
8/135	35-45	3,9x25 3,9x50	-	-	●	●	●	●	-	●	●	●
7/135	35-45	3,9x25 3,9x50	-	-	●	●	●	●	-	●	●	●
8/135	35-45	3,9x25	-	-	●	●	●	●	-	●	●	●
7/135	35-45	3,9x25	-	-	●	●	●	●	-	●	●	●
8/135	35-45	3,9x50	-	-	●	●	●	●	-	●	●	●
8/160	60-90	3,9x25 3,9x75 3,9x95	-	-	●	●	●	●	-	●	●	●
8/135	35-45	3,9x25 3,9x50	-	-	●	●	●	●	-	●	●	●
8/160	60-90	3,9x25 3,9x75 3,9x95	-	-	●	●	●	●	-	●	●	●
7/135	35-45	3,9x25 3,9x50	-	-	●	●	●	●	-	●	●	●
7/160	60-90	3,9x25 3,9x75 3,9x95	-	-	●	●	●	●	-	●	●	●
8/135	35-65	3,9x25	-	-	●	●	●	●	-	●	●	●
8/160	60-90	3,9x25	-	-	●	●	●	●	-	●	●	●
7/135	35-65	3,9x25	-	-	●	●	●	●	-	●	●	●
7/160	60-90	3,9x25	-	-	●	●	●	●	-	●	●	●
(8)/135	35-45	3,9x50	-	-	●	●	●	●	-	●	●	●

■	+	X	14802040	14802041	14802042	14802039	14802001	14802043	14802044	14802046	14802048	14802005	14802051	14802052	14802045	14802053	14802047	14802054	14802015	14802055	14802049	14802056	14802050	14802057	05112122
8*	35-45	3,9x25 3,9x50	14802040																						
7*	-	3,9x25 3,9x50		14802041																					
8/135	35-45	3,9x50			14802042																				
8/135	35-45	3,9x25 3,9x50				14802039																			
7/135	35-45	3,9x25 3,9x50					14802001																		
8/135	35-65	3,9x25						14802043																	
7/135	35-65	3,9x25							14802044																
8/135	35-45	3,9x50								14802046															
8/135	35-45	3,9x25 3,9x50									14802048														
7/135	35-45	3,9x25 3,9x50										14802005													
8/135	35-45	3,9x25											14802051												
7/135	35-45	3,9x25												14802052											
8/135	35-45	3,9x50													14802045										
8/160	60-90	3,9x25 3,9x75 3,9x95														14802053									
8/135	35-45	3,9x25 3,9x50															14802047								
8/160	60-90	3,9x25 3,9x75 3,9x95																14802054							
7/135	35-45	3,9x25 3,9x50																	14802015						
7/160	60-90	3,9x25 3,9x75 3,9x95																		14802055					
8/135	35-65	3,9x25																			14802049				
8/160	60-90	3,9x25																				14802056			
7/135	35-65	3,9x25																					14802050		
7/160	60-90	3,9x25																						14802057	
(8)/135	35-45	3,9x50																							05112122

Descrizione_Description **SOFIA**_design Leo De Carlo

ZAMAK

Supporto_Support **ø52x10mm**

												PLATINUM ABACO* 62	BLACK PEARL ABACO* 50	PLATINUM 03	BLACK PEARL 04	COPPER PEARL 5B	NOIR PEARL 08	COPPER SHINING 52	CRYSTAL SHINING 07	NATURAL GOLD 51	WHITE PEARL 02
	(8)/135		35-45	3,9x25 3,9x50	38	Ø8	-	4	6	05112110	-	-	●	●	●	●	-	●	●	●
	(7)/135		35-45	3,9x25 3,9x50	38	Ø8	-	4	6	05112111	-	-	●	●	●	●	-	●	●	●
	(6)/135		35-45	3,9x25 3,9x50	38	Ø8	-	4	6	05112112	-	-	●	●	●	●	-	●	●	●
	(5)/135		35-45	3,9x25 3,9x50	38	Ø8	-	4	6	05112254	-	-	●	●	●	●	-	●	●	●
	(4)/135		35-45	3,9x25 3,9x50	38	Ø8	-	4	6	05112113	-	-	●	●	●	●	-	●	●	●
	8/135	GLAS	35-45	3,9x25 3,9x50	38	Ø8	-	12	1	19402005	-	-	●	●	●	●	-	●	●	●
	7/135	GLAS	35-45	3,9x25 3,9x50	38	Ø8	-	12	1	19402006	-	-	●	●	●	●	-	●	●	●
	8/155	GLAS	50-55	3,9x25 3,9x70	38	Ø8	-	12	1	19402007	-	-	●	●	●	●	-	●	●	●
	7/155	GLAS	50-55	3,9x25 3,9x70	38	Ø8	-	12	1	19402008	-	-	●	●	●	●	-	●	●	●
	8/165	GLAS	60-75	3,9x25 3,9x65 3,9x75 3,9x95	38	Ø8	-	12	1	19402009	-	-	●	●	●	●	-	●	●	●
	7/165	GLAS	60-75	3,9x25 3,9x65 3,9x75 3,9x95	38	Ø8	-	12	1	19402010	-	-	●	●	●	●	-	●	●	●
	8/175	GLAS	75-90	3,9x25 3,9x65 3,9x75 3,9x95	38	Ø8	-	12	1	19402011	-	-	●	●	●	●	-	●	●	●
	7/175	GLAS	75-90	3,9x25 3,9x65 3,9x75 3,9x95	38	Ø8	-	12	1	19402012	-	-	●	●	●	●	-	●	●	●

Descrizione_Description **1/2 ferro ancora**_1/2 anchor spindle

STEEL

Supporto_Support -

											MECHANISM 26
	8/60	GLAS CO	-	-	-	-	-	-	10	8	06727462	●
	8/70	GLAS CO	-	-	-	-	-	-	10	8	06727427	●
	8/80	GLAS CO	-	-	-	-	-	-	10	8	06727428	●
	8/90	GLAS CO	-	-	-	-	-	-	10	8	06727429	●
	8/100	GLAS CO	-	-	-	-	-	-	10	8	06727463	●
	7/60	GLAS CO	-	-	-	-	-	-	10	8	06727432	●
	7/70	GLAS CO	-	-	-	-	-	-	10	8	06727433	●
	7/80	GLAS CO	-	-	-	-	-	-	10	8	06727434	●
	7/90	GLAS CO	-	-	-	-	-	-	10	8	06727435	●
	7/100	GLAS CO	-	-	-	-	-	-	10	8	06727436	●

Descrizione_Description **LOFT/ROUND** pomolo fisso_fixed knob

ZAMAK

Supporto_Support **ø52x10mm**

												PLATINUM ABACO* 62	BLACK PEARL ABACO* 50	PLATINUM 03	BLACK PEARL 04	COPPER PEARL 5B	NOIR PEARL 08	COPPER SHINING 52	CRYSTAL SHINING 07	NATURAL GOLD 51	WHITE PEARL 02
	7* or 8*	GLAS	-	3,9x25 3,9x50	38	Ø8	-	12	1	17002001	-	-	●	●	●	●	-	●	●	●
	7* or 8*	GLAS	-	3,9x25 3,9x50	38	Ø8	-	12	1	19602001	-	-	●	●	●	●	-	●	●	●

Descrizione_Description **1/2 ferro per pomolo fisso**_1/2 fixed knob spindle

STEEL

Supporto_Support -

											MECHANISM 26
	7/90	GLAS CO	-	45-55	-	-	-	-	10	8	06727507	●
	7/100	GLAS CO	-	50-65	-	-	-	-	10	8	06727508	●
	7/110	GLAS CO	-	60-75	-	-	-	-	10	8	06727509	●
	7/120	GLAS CO	-	70-85	-	-	-	-	10	8	06727510	●
	7/130	GLAS CO	-	80-95	-	-	-	-	10	8	06727551	●
	7/140	GLAS CO	-	90-105	-	-	-	-	10	8	06727552	●
	8/90	GLAS CO	-	45-55	-	-	-	-	10	8	06727503	●
	8/100	GLAS CO	-	50-65	-	-	-	-	10	8	06727504	●
	8/110	GLAS CO	-	60-75	-	-	-	-	10	8	06727505	●
	8/120	GLAS CO	-	70-85	-	-	-	-	10	8	06727506	●
	8/130	GLAS CO	-	80-95	-	-	-	-	10	8	06727549	●
	8/140	GLAS CO	-	90-105	-	-	-	-	10	8	06727550	●

SOFIA

design Leo De Carlo

BRASS | **ZAMAK** | ALU | AISI 316 | AISI 304

MANIGLIA PER PORTE INTERNE – SUPPORTO ø45X8mm_INTERNAL DOORS HANDLE – SUPPORT ø45X8mm

CARATTERISTICHE_FEATURES	**FISSAGGIO**_FIXING	**FINITURE**_FINISHES	**OPZIONI**_OPTIONS
CLAQ		1.000h · 500h · 500h · 500h · 500h · PVD 500h · 500h	EN-179

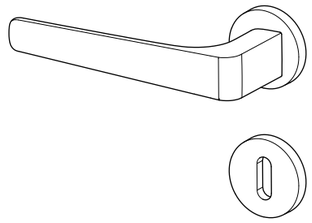

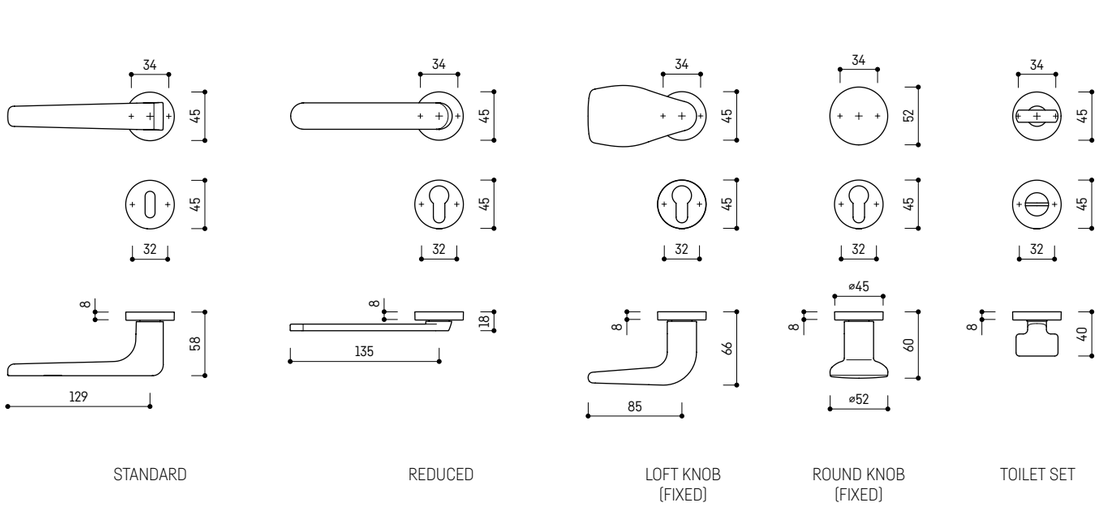

VERSIONI DISPONIBILI_AVAILABLE VERSIONS

CAPITOLATO_SPECIFICATION

ULTRACYCLE®

ULTRACYCLE® tested for over **1.000.000** cycles - **CLASS 4**

NORMA DIN EN 1906_DIN EN 1906 NORM

4 | 7 | - | 0 | 0 | 4 | 0 | A

Per una descrizione dettagliata di tutte le specifiche tecniche presenti nel prodotto, da impiegare nei capitolati o nelle offerte pubbliche, fate riferimento alla sezione CAPITOLATI_for a detailed description of all the technical informations contained in the product, to be used in the specifications or in public tenders, please refer to the SPECIFICATIONS section.

Descrizione_Description: **SOFIA**_design Leo De Carlo

ZAMAK

Supporto_Support: **ø45X8mm**

												PLATINUM ABACO* 62	BLACK PEARL ABACO* 50	PLATINUM 03	BLACK PEARL 04	COPPER PEARL 5B	NOIR PEARL 08	COPPER SHINING 52	CRYSTAL SHINING 07	NATURAL GOLD 51	WHITE PEARL 02
	8*	CLAQ		-	3,9x25	34/32	-	-	12	2	14877001	-	-	●	●	●	●	-	●	●	●
	7*	CLAQ		-	3,9x25	34/32	-	-	12	2	14877002	-	-	●	●	●	●	-	●	●	●
	8/135	CLAQ		35-45	3,9x25	34	-	-	12	2	14877003	-	-	●	●	●	●	-	●	●	●
	7/135	CLAQ		35-45	3,9x25	34	-	-	12	2	14877004	-	-	●	●	●	●	-	●	●	●
	8/135	CLAQ		35-45	3,9x25	34/32	-	-	12	2	14877005	-	-	●	●	●	●	-	●	●	●
	7/135	CLAQ		35-45	3,9x25	34/32	-	-	12	2	14877006	-	-	●	●	●	●	-	●	●	●
	8/135	CLAQ		35-65	3,9x25	34/32	-	-	12	2	14877007	-	-	●	●	●	●	-	●	●	●
	7/135	CLAQ		35-65	3,9x25	34/32	-	-	12	2	14877008	-	-	●	●	●	●	-	●	●	●
	8/160	CLAQ		60-90	3,9x25	34/32	-	-	12	2	14877009	-	-	●	●	●	●	-	●	●	●
	7/160	CLAQ		60-90	3,9x25	34/32	-	-	12	2	14877010	-	-	●	●	●	●	-	●	●	●
	(8)/135	-		35-45	3,9x25	34/32	-	-	4	6	05112197	-	-	●	●	●	●	-	●	●	●
	(7)/135	-		35-45	3,9x25	34/32	-	-	4	6	05112198	-	-	●	●	●	●	-	●	●	●
	(6)/135	-		35-45	3,9x25	34/32	-	-	4	6	05112199	-	-	●	●	●	●	-	●	●	●
	(5)/135	-		35-45	3,9x25	34/32	-	-	4	6	05112257	-	-	●	●	●	●	-	●	●	●
	(4)/135	-		35-45	3,9x25	34/32	-	-	4	6	05112200	-	-	●	●	●	●	-	●	●	●
	8/135	CLAQ		35-45	3,9x25	34	-	-	12	1	19477001	-	-	●	●	●	●	-	●	●	●
	7/135	CLAQ		35-45	3,9x25	34	-	-	12	1	19477002	-	-	●	●	●	●	-	●	●	●
	8/155	CLAQ		50-55	3,9x25	34	-	-	12	1	19477003	-	-	●	●	●	●	-	●	●	●
	7/155	CLAQ		50-55	3,9x25	34	-	-	12	1	19477004	-	-	●	●	●	●	-	●	●	●
	8/165	CLAQ		60-75	3,9x25	34	-	-	12	1	19477005	-	-	●	●	●	●	-	●	●	●
	7/165	CLAQ		60-75	3,9x25	34	-	-	12	1	19477006	-	-	●	●	●	●	-	●	●	●
	8/175	CLAQ		75-90	3,9x25	34	-	-	12	1	19477007	-	-	●	●	●	●	-	●	●	●
	7/175	CLAQ		75-90	3,9x25	34	-	-	12	1	19477008	-	-	●	●	●	●	-	●	●	●

Descrizione_Description **1/2 ferro ancora**_1/2 anchor spindle

STEEL

Supporto_Support -

												MECHANISM 26
8/60	CLAQ CE	-	-	-	-	-	-	10	8	06727462		●
8/70	CLAQ CE	-	-	-	-	-	-	10	8	06727427		●
8/80	CLAQ CE	-	-	-	-	-	-	10	8	06727428		●
8/90	CLAQ CE	-	-	-	-	-	-	10	8	06727429		●
8/100	CLAQ CE	-	-	-	-	-	-	10	8	06727463		●
7/60	CLAQ CE	-	-	-	-	-	-	10	8	06727432		●
7/70	CLAQ CE	-	-	-	-	-	-	10	8	06727433		●
7/80	CLAQ CE	-	-	-	-	-	-	10	8	06727434		●
7/90	CLAQ CE	-	-	-	-	-	-	10	8	06727435		●
7/100	CLAQ CE	-	-	-	-	-	-	10	8	06727436		●

Descrizione_Description **LOFT/ROUND** pomolo fisso_fixed knob

ZAMAK

Supporto_Support **ø45X8mm**

												PLATINUM ABACO® 62	BLACK PEARL ABACO® 50	PLATINUM PVD 03	BLACK PEARL PVD 04	COPPER PEARL PVD 5B	NOIR PEARL PVD 08	COPPER SHINING PVD 52	CRYSTAL SHINING PVD 07	NATURAL GOLD PVD 51	WHITE PEARL PVD 02
7" or 8"	CLAQ	-	-	3,9x25	34	-	-	12	1	17077001		-	-	●	●	●	●	-	●	●	●
7" or 8"	CLAQ	-	-	3,9x25	34	-	-	12	1	19677001		-	-	●	●	●	●	-	●	●	●

Descrizione_Description **1/2 ferro per pomolo fisso**_1/2 fixed knob spindle

STEEL

Supporto_Support -

											MECHANISM 26
7/90	CLAQ CE	-	45-55	-	-	-	-	10	8	06727507	●
7/100	CLAQ CE	-	50-65	-	-	-	-	10	8	06727508	●
7/110	CLAQ CE	-	60-75	-	-	-	-	10	8	06727509	●
7/120	CLAQ CE	-	70-85	-	-	-	-	10	8	06727510	●
7/130	CLAQ CE	-	80-95	-	-	-	-	10	8	06727551	●
7/140	CLAQ CE	-	90-105	-	-	-	-	10	8	06727552	●
8/90	CLAQ CE	-	45-55	-	-	-	-	10	8	06727503	●
8/100	CLAQ CE	-	50-65	-	-	-	-	10	8	06727504	●
8/110	CLAQ CE	-	60-75	-	-	-	-	10	8	06727505	●
8/120	CLAQ CE	-	70-85	-	-	-	-	10	8	06727506	●
8/130	CLAQ CE	-	80-95	-	-	-	-	10	8	06727549	●
8/140	CLAQ CE	-	90-105	-	-	-	-	10	8	06727550	●

SOFIA

design Leo De Carlo

CE

BRASS | **ZAMAK** | ALU | AISI 316 | AISI 304

MANIGLIA PER PORTE INTERNE – SUPPORTO MINIMAL ø25x2mm_INTERNAL DOORS HANDLE – SUPPORT MINIMAL ø25x2mm

CARATTERISTICHE_FEATURES	**FISSAGGIO**_FIXING	**FINITURE**_FINISHES	**OPZIONI**_OPTIONS
CLAQ		1.000h · 500h · 500h · 500h · 500h · PVD 500h · 500h	EN-179 · REI-60 · IP-65

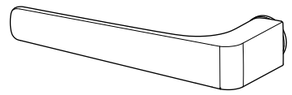

STANDARD TOILET SET

VERSIONI DISPONIBILI_AVAILABLE VERSIONS

CAPITOLATO_SPECIFICATION

ULTRACYCLE®

ULTRACYCLE® tested for over **1.000.000** cycles - **CLASS 4**

NORMA DIN EN 1906_DIN EN 1906 NORM

4 | 7 | - | 0 | 0 | 4 | 0 | A

Per una descrizione dettagliata di tutte le specifiche tecniche presenti nel prodotto, da impiegare nei capitolati o nelle offerte pubbliche, fate riferimento alla sezione CAPITOLATI_for a detailed description of all the technical informations contained in the product, to be used in the specifications or in public tenders, please refer to the SPECIFICATIONS section.

Descrizione_Description | **SOFIA**_design Leo De Carlo

ZAMAK

Supporto_Support | **MINIMAL ø25x2mm**

	■	+										PLATINUM ABACO® 62	BLACK PEARL ABACO® 50	PLATINUM PVD 03	BLACK PEARL PVD 04	COPPER PEARL PVD 5B	NOIR PEARL PVD 08	COPPER SHINING PVD 52	CRYSTAL SHINING PVD 07	NATURAL GOLD PVD 51	WHITE PEARL PVD 02
	8/135	CLAC	◎	35-45	-	-	ø20	-	12	2	14846001	-	-	●	●	●	●	-	●	●	●
	7/135	CLAC	◎	35-45	-	-	ø20	-	12	2	14846002	-	-	●	●	●	●	-	●	●	●
◎ ◎	-	CLAC	◎	-	-	-	ø20	-	24	10	06548093	-	-	●	●	●	●	-	●	●	●
◍ ◍	-	-	◎	-	-	-	ø20	-	24	10	06525146	-	-	●	●	●	●	-	●	●	●
⓪ ⓪	-	-	◎	-	-	-	-	-	24	10	06525145	-	-	●	●	●	●	-	●	●	●
⊜ ⊜	(8)/135	-	◎	35-45	-	-	ø20	-	4	6	05112233	-	-	●	●	●	●	-	●	●	●
	(7)/135	-	◎	35-45	-	-	ø20	-	4	6	05112234	-	-	●	●	●	●	-	●	●	●
	(6)/135	-	◎	35-45	-	-	ø20	-	4	6	05112235	-	-	●	●	●	●	-	●	●	●
	(5)/135	-	◎	35-45	-	-	ø20	-	4	6	05112259	-	-	●	●	●	●	-	●	●	●
	(4)/135	-	◎	35-45	-	-	ø20	-	4	6	05112260	-	-	●	●	●	●	-	●	●	●

SOFIA

design Leo De Carlo

CE

BRASS | **ZAMAK** | ALU | AISI 316 | AISI 304

MANIGLIA PER PORTE INTERNE – SUPPORTO EASYPIN ø55x2mm_INTERNAL DOORS HANDLE – SUPPORT EASYPIN ø55x2mm

CARATTERISTICHE_FEATURES					**FISSAGGIO**_FIXING						**FINITURE**_FINISHES							**OPZIONI**_OPTIONS			
	CLAC										P 1.000h	304 500h	316 500h	500h	500h	PVD 500h	500h		EN-179	REI-60	IP-65

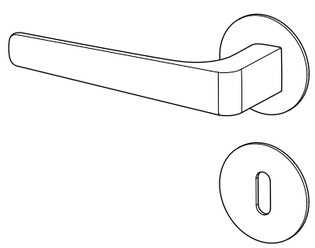

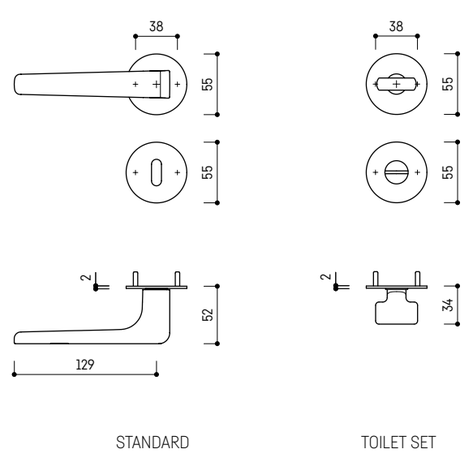

STANDARD TOILET SET

VERSIONI DISPONIBILI_AVAILABLE VERSIONS

	◎ ◎	⓪ ⓪	◍ ◍	⊜ ⊜

CAPITOLATO_SPECIFICATION

ULTRACYCLE®

ULTRACYCLE® tested for over **1.000.000** cycles - **CLASS 4**

NORMA DIN EN 1906_DIN EN 1906 NORM

4 | 7 | - | 0 | 0 | 4 | 0 | A

Per una descrizione dettagliata di tutte le specifiche tecniche presenti nel prodotto, da impiegare nei capitolati o nelle offerte pubbliche, fate riferimento alla sezione CAPITOLATI_for a detailed description of all the technical informations contained in the product, to be used in the specifications or in public tenders, please refer to the SPECIFICATIONS section.

Descrizione_Description | **SOFIA**_design Leo De Carlo

ZAMAK

Supporto_Support | **EASYPIN ø55x2mm**

	■	+										PLATINUM ABACO® 62	BLACK PEARL ABACO® 50	PLATINUM PVD 03	BLACK PEARL PVD 04	COPPER PEARL PVD 5B	NOIR PEARL PVD 08	COPPER SHINING PVD 52	CRYSTAL SHINING PVD 07	NATURAL GOLD PVD 51	WHITE PEARL PVD 02
	8/135	CLAG		35-45	-	38	Ø7	-	12	2	14859001	-	-	●	●	●	●	-	●	●	●
	7/135	CLAG		35-45	-	38	Ø7	-	12	2	14859002	-	-	●	●	●	●	-	●	●	●
	-	CLAG		-	-	38	Ø7	-	24	10	06548077	-	-	●	●	●	●	-	●	●	●
	-	-		-	-	38	Ø7	-	24	10	06525121	-	-	●	●	●	●	-	●	●	●
	-	-		-	-	38	Ø7	-	24	10	06525120	-	-	●	●	●	●	-	●	●	●
	(8)/135	-		35-45	-	38	Ø7	-	4	6	05112251	-	-	●	●	●	●	-	●	●	●
	(7)/135	-		35-45	-	38	Ø7	-	4	6	05112261	-	-	●	●	●	●	-	●	●	●
	(6)/135	-		35-45	-	38	Ø7	-	4	6	05112262	-	-	●	●	●	●	-	●	●	●
	(5)/135	-		35-45	-	38	Ø7	-	4	6	05112263	-	-	●	●	●	●	-	●	●	●
	(4)/135	-		35-45	-	38	Ø7	-	4	6	05112264	-	-	●	●	●	●	-	●	●	●

SOFIA

design Leo De Carlo

CE

BRASS | **ZAMAK** | ALU | AISI 316 | AISI 304

MANIGLIA PER PORTE INTERNE – SUPPORTO 40x235x9mm_INTERNAL DOORS HANDLE – SUPPORT 40x235x9mm

CARATTERISTICHE_FEATURES	**FISSAGGIO**_FIXING	**FINITURE**_FINISHES	**OPZIONI**_OPTIONS
CLAG		1.000h · 500h · 500h · 500h · 500h · PVD 500h · 500h	EN-179

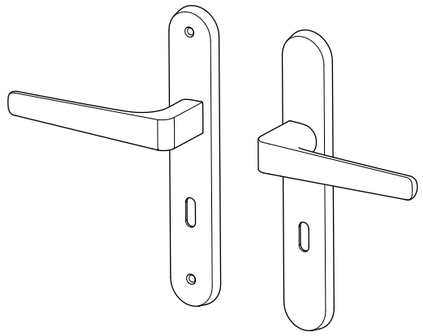

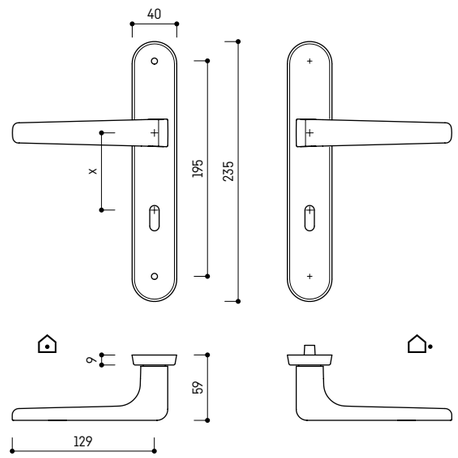

VERSIONI DISPONIBILI_AVAILABLE VERSIONS

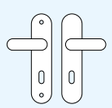
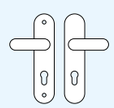
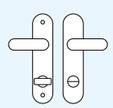

CAPITOLATO_SPECIFICATION

ULTRACYCLE®

ULTRACYCLE® tested for over **1.000.000** cycles - **CLASS 4**

NORMA DIN EN 1906_DIN EN 1906 NORM

4 | 7 | - | 0 | 0 | 4 | 0 | A

Per una descrizione dettagliata di tutte le specifiche tecniche presenti nel prodotto, da impiegare nei capitolati o nelle offerte pubbliche, fate riferimento alla sezione CAPITOLATI_for a detailed description of all the technical informations contained in the product, to be used in the specifications or in public tenders, please refer to the SPECIFICATIONS section.

Descrizione_Description | **SOFIA**_design Leo De Carlo

ZAMAK

Supporto_Support | **40x235x9mm**

												PLATINUM ABACO® 62	BLACK PEARL ABACO® 50	PLATINUM PVD 03	BLACK PEARL PVD 04	COPPER PEARL PVD 5B	NOIR PEARL PVD 08	COPPER SHINING PVD 52	CRYSTAL SHINING PVD 07	NATURAL GOLD PVD 51	WHITE PEARL PVD 02
	8/135	35-55	M4x75 SEC	195	Ø10	72	12	2	14801053	-	-	●	●	●	●	-	●	●	●
	7/135	35-55	M4x75 SEC	195	Ø10	70	12	2	14801055	-	-	●	●	●	●	-	●	●	●
	8/135	35-55	M4x75 SEC	195	Ø10	72	12	2	14801052	-	-	●	●	●	●	-	●	●	●
	7/135	35-55	M4x75 SEC	195	Ø10	70	12	2	14801028	-	-	●	●	●	●	-	●	●	●
	8(8)/135	35-55	M4x75 SEC	195	Ø10	78	12	2	14801054	-	-	●	●	●	●	-	●	●	●
	7(6)/135	35-55	M4x75 SEC	195	Ø10	70	12	2	14801056	-	-	●	●	●	●	-	●	●	●

GAIUS

design Leo De Carlo

BRASS | **ZAMAK** | ALU | AISI 316 | AISI 304

MANIGLIA PER PORTE INTERNE – SUPPORTO 55x55x12mm_INTERNAL DOORS HANDLE – SUPPORT 55x55x12mm

CARATTERISTICHE_FEATURES	**FISSAGGIO**_FIXING	**FINITURE**_FINISHES	**OPZIONI**_OPTIONS
CLAQ		1.000h · 304 500h · 316 500h · 500h · 500h · PVD 500h · 500h	EN-179 · REI-60 · IP-65

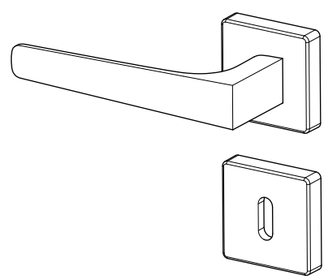

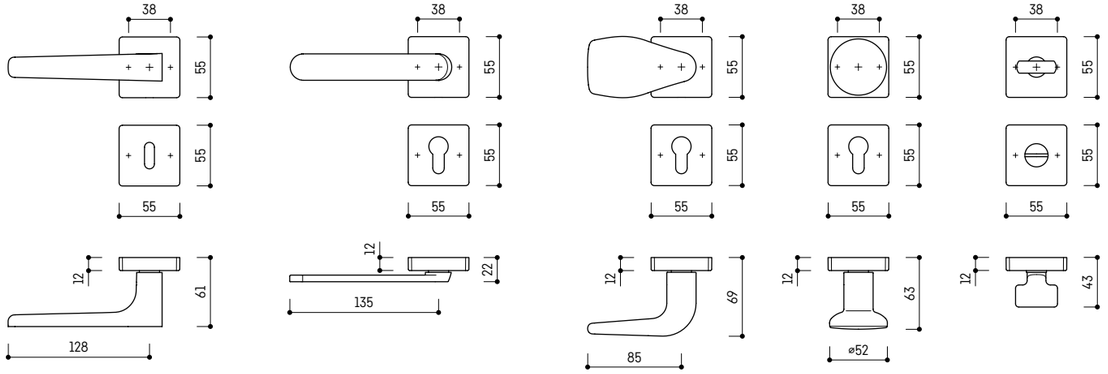

STANDARD | REDUCED | LOFT KNOB (FIXED) | ROUND KNOB (FIXED) | TOILET SET

VERSIONI DISPONIBILI_AVAILABLE VERSIONS

CAPITOLATO_SPECIFICATION

ULTRACYCLE®

ULTRACYCLE® tested for over **1.000.000** cycles - **CLASS 4**

NORMA DIN EN 1906_DIN EN 1906 NORM

4 | 7 | - | 0 | 0 | 4 | 0 | A

Per una descrizione dettagliata di tutte le specifiche tecniche presenti nel prodotto, da impiegare nei capitolati o nelle offerte pubbliche, fate riferimento alla sezione CAPITOLATI_for a detailed description of all the technical informations contained in the product, to be used in the specifications or in public tenders, please refer to the SPECIFICATIONS section.

Descrizione_Description — **GAIUS**_design Leo De Carlo

Supporto_Support — ZAMAK — 55x55x12mm

■	+										PLATINUM ABACO* 62	BLACK PEARL ABACO* 50	PLATINUM 03	BLACK PEARL 04	COPPER PEARL 5B	NOIR PEARL 08	COPPER SHINING 52	CRYSTAL SHINING 07	NATURAL GOLD 51	WHITE PEARL 02
8*			-	3,9x25 3,9x50	38	Ø8	-	12	2	07897001	-	-	●	●	●	●	-	●	●	●
7*			-	3,9x25 3,9x50	38	Ø8	-	12	2	07897002	-	-	●	●	●	●	-	●	●	●
8/135			35-45	3,9x50	38	Ø8	-	12	2	07897003	-	-	●	●	●	●	-	●	●	●
8/135			35-45	3,9x25 3,9x50	38	Ø8	-	12	2	07897004	-	-	●	●	●	●	-	●	●	●
7/135			35-45	3,9x25 3,9x50	38	Ø8	-	12	2	07897005	-	-	●	●	●	●	-	●	●	●
8/135			35-65	3,9x25	38	Ø8	-	12	2	07897006	-	-	●	●	●	●	-	●	●	●
7/135			35-65	3,9x25	38	Ø8	-	12	2	07897007	-	-	●	●	●	●	-	●	●	●
8/135			35-45	3,9x50	38	Ø8	-	12	2	07897009	-	-	●	●	●	●	-	●	●	●
8/135			35-45	3,9x25 3,9x50	38	Ø8	-	12	2	07897012	-	-	●	●	●	●	-	●	●	●
7/135			35-45	3,9x25 3,9x50	38	Ø8	-	12	2	07897013	-	-	●	●	●	●	-	●	●	●
8/135			35-45	3,9x25	38	-	-	12	2	07897016	-	-	●	●	●	●	-	●	●	●
7/135			35-45	3,9x25	38	-	-	12	2	07897017	-	-	●	●	●	●	-	●	●	●
8/135			35-45	3,9x50	38	Ø8	-	12	2	07897008	-	-	●	●	●	●	-	●	●	●
8/160			60-90	3,9x25 3,9x75 3,9x95	38	Ø8	-	12	2	07897018	-	-	●	●	●	●	-	●	●	●
8/135			35-45	3,9x25 3,9x50	38	Ø8	-	12	2	07897010	-	-	●	●	●	●	-	●	●	●
8/160			60-90	3,9x25 3,9x75 3,9x95	38	Ø8	-	12	2	07897019	-	-	●	●	●	●	-	●	●	●
7/135			35-45	3,9x25 3,9x50	38	Ø8	-	12	2	07897011	-	-	●	●	●	●	-	●	●	●
7/160			60-90	3,9x25 3,9x75 3,9x95	38	Ø8	-	12	2	07897020	-	-	●	●	●	●	-	●	●	●
8/135			35-65	3,9x25	38	Ø8	-	12	2	07897014	-	-	●	●	●	●	-	●	●	●
8/160			60-90	3,9x25	38	Ø8	-	12	2	07897021	-	-	●	●	●	●	-	●	●	●
7/135			35-65	3,9x25	38	Ø8	-	12	2	07897015	-	-	●	●	●	●	-	●	●	●
7/160			60-90	3,9x25	38	Ø8	-	12	2	07897022	-	-	●	●	●	●	-	●	●	●
(8)/135			35-45	3,9x50	38	Ø8	-	4	6	05112182	-	-	●	●	●	●	-	●	●	●

Descrizione_Description — **GAIUS**_design Leo De Carlo

Supporto_Support — ZAMAK — 55x55x12mm

■	+										PLATINUM ABACO* 62	BLACK PEARL ABACO* 50	PLATINUM 03	BLACK PEARL 04	COPPER PEARL 5B	NOIR PEARL 08	COPPER SHINING 52	CRYSTAL SHINING 07	NATURAL GOLD 51	WHITE PEARL 02
(8)/135			35-45	3,9x25 3,9x50	38	Ø8	-	4	6	05112170	-	-	●	●	●	●	-	●	●	●
(7)/135			35-45	3,9x25 3,9x50	38	Ø8	-	4	6	05112171	-	-	●	●	●	●	-	●	●	●
(6)/135			35-45	3,9x25 3,9x50	38	Ø8	-	4	6	05112172	-	-	●	●	●	●	-	●	●	●
(5)/135			35-45	3,9x25 3,9x50	38	Ø8	-	4	6	05112273	-	-	●	●	●	●	-	●	●	●
(4)/135			35-45	3,9x25 3,9x50	38	Ø8	-	4	6	05112173	-	-	●	●	●	●	-	●	●	●
8/135			35-45	3,9x25 3,9x50	38	Ø8	-	12	1	19497001	-	-	●	●	●	●	-	●	●	●
7/135			35-45	3,9x25 3,9x50	38	Ø8	-	12	1	19497002	-	-	●	●	●	●	-	●	●	●
8/155			50-55	3,9x25 3,9x70	38	Ø8	-	12	1	19497003	-	-	●	●	●	●	-	●	●	●
7/155			50-55	3,9x25 3,9x70	38	Ø8	-	12	1	19497004	-	-	●	●	●	●	-	●	●	●
8/165			60-75	3,9x25 3,9x65 3,9x75 3,9x95	38	Ø8	-	12	1	19497005	-	-	●	●	●	●	-	●	●	●
7/165			60-75	3,9x25 3,9x65 3,9x75 3,9x95	38	Ø8	-	12	1	19497006	-	-	●	●	●	●	-	●	●	●
8/175			75-90	3,9x25 3,9x65 3,9x75 3,9x95	38	Ø8	-	12	1	19497007	-	-	●	●	●	●	-	●	●	●
7/175			75-90	3,9x25 3,9x65 3,9x75 3,9x95	38	Ø8	-	12	1	19497008	-	-	●	●	●	●	-	●	●	●

Descrizione_Description — **1/2 ferro ancora**_1/2 anchor spindle

Supporto_Support — STEEL — -

■	+										MECHANISM 26
8/60		-	-	-	-	-	-	10	8	06727462	●
8/70		-	-	-	-	-	-	10	8	06727427	●
8/80		-	-	-	-	-	-	10	8	06727428	●
8/90		-	-	-	-	-	-	10	8	06727429	●
8/100		-	-	-	-	-	-	10	8	06727463	●
7/60		-	-	-	-	-	-	10	8	06727432	●
7/70		-	-	-	-	-	-	10	8	06727433	●
7/80		-	-	-	-	-	-	10	8	06727434	●
7/90		-	-	-	-	-	-	10	8	06727435	●
7/100		-	-	-	-	-	-	10	8	06727436	●

Descrizione_Description **LOFT/ROUND** pomolo fisso_fixed knob

ZAMAK

Supporto_Support **55x55x12mm**

												PLATINUM ABACO* 62	BLACK PEARL ABACO* 50	PLATINUM 03	BLACK PEARL 04	COPPER PEARL 5B	NOIR PEARL 08	COPPER SHINING 52	CRYSTAL SHINING 07	NATURAL GOLD 51	WHITE PEARL 02
	7* or 8*			-	3,9x25 3,9x50	38	Ø8	-	12	1	17097001	-	-	●	●	●	●	-	●	●	●
	7* or 8*			-	3,9x25 3,9x50	38	Ø8	-	12	1	19697001	-	-	●	●	●	●	-	●	●	●

Descrizione_Description **1/2 ferro per pomolo fisso**_1/2 fixed knob spindle

STEEL

Supporto_Support -

											MECHANISM 26
7/90		-	45-55	-	-	-	-	10	8	06727507	●
7/100		-	50-65	-	-	-	-	10	8	06727508	●
7/110		-	60-75	-	-	-	-	10	8	06727509	●
7/120		-	70-85	-	-	-	-	10	8	06727510	●
7/130		-	80-95	-	-	-	-	10	8	06727551	●
7/140		-	90-105	-	-	-	-	10	8	06727552	●
8/90		-	45-55	-	-	-	-	10	8	06727503	●
8/100		-	50-65	-	-	-	-	10	8	06727504	●
8/110		-	60-75	-	-	-	-	10	8	06727505	●
8/120		-	70-85	-	-	-	-	10	8	06727506	●
8/130		-	80-95	-	-	-	-	10	8	06727549	●
8/140		-	90-105	-	-	-	-	10	8	06727550	●

GAIUS

design Leo De Carlo

CE

BRASS **ZAMAK** ALU AISI 316 AISI 304

MANIGLIA PER PORTE INTERNE – SUPPORTO MINIMAL 25x25x2mm_INTERNAL DOORS HANDLE – SUPPORT MINIMAL 25x25x2mm

CARATTERISTICHE_FEATURES	**FISSAGGIO**_FIXING	**FINITURE**_FINISHES										**OPZIONI**_OPTIONS			
		1.000h	304 500h	316 500h	500h	500h	PVD 500h	500h					EN-179	REI-60	IP-65

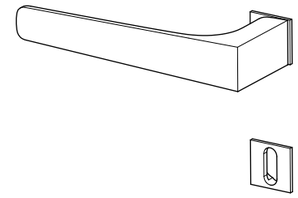

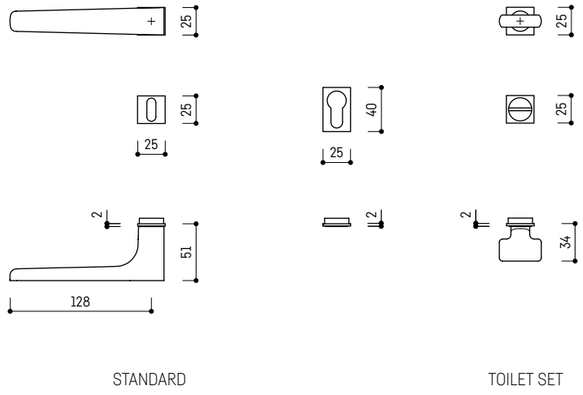

STANDARD TOILET SET

VERSIONI DISPONIBILI_AVAILABLE VERSIONS

CAPITOLATO_SPECIFICATION ULTRACYCLE®

ULTRACYCLE® tested for over **1.000.000** cycles - **CLASS 4**

NORMA DIN EN 1906_DIN EN 1906 NORM

4 | 7 | - | 0 | 0 | 4 | 0 | A

Per una descrizione dettagliata di tutte le specifiche tecniche presenti nel prodotto, da impiegare nei capitolati o nelle offerte pubbliche, fate riferimento alla sezione CAPITOLATI_for a detailed description of all the technical informations contained in the product, to be used in the specifications or in public tenders, please refer to the SPECIFICATIONS section.

Descrizione_Description | **GAIUS**_design Leo De Carlo

ZAMAK

Supporto_Support | **MINIMAL 25x25x2mm**

	■	+										PLATINUM ABACO* 62	BLACK PEARL ABACO* 50	PLATINUM 03	BLACK PEARL 04	COPPER PEARL 5B	NOIR PEARL 08	COPPER SHINING 52	CRYSTAL SHINING 07	NATURAL GOLD 51	WHITE PEARL 02
	8/135	CLAC	◎	35-45	-	-	ø20	-	12	2	07896001	-	-	●	●	●	●	-	●	●	●
	7/135	CLAC	◎	35-45	-	-	ø20	-	12	2	07896002	-	-	●	●	●	●	-	●	●	●
	-	CLAC	◎	-	-	-	ø20	-	24	10	06548092	-	-	●	●	●	●	-	●	●	●
	-	-	◎	-	-	-	ø20	-	24	10	06525072	-	-	●	●	●	●	-	●	●	●
	-	-	◎	-	-	-	-	-	24	10	06525071	-	-	●	●	●	●	-	●	●	●
	(8)/135	-	◎	35-45	-	-	ø20	-	4	6	05112242	-	-	●	●	●	●	-	●	●	●
	(7)/135	-	◎	35-45	-	-	ø20	-	4	6	05112243	-	-	●	●	●	●	-	●	●	●
	(6)/135	-	◎	35-45	-	-	ø20	-	4	6	05112244	-	-	●	●	●	●	-	●	●	●
	(5)/135	-	◎	35-45	-	-	ø20	-	4	6	05112267	-	-	●	●	●	●	-	●	●	●
	(4)/135	-	◎	35-45	-	-	ø20	-	4	6	05112268	-	-	●	●	●	●	-	●	●	●

GAIUS

design Leo De Carlo

CE

BRASS | **ZAMAK** | ALU | AISI 316 | AISI 304

MANIGLIA PER PORTE INTERNE – SUPPORTO EASYPIN 55x55x2mm_INTERNAL DOORS HANDLE – SUPPORT EASYPIN 55x55x2mm

CARATTERISTICHE_FEATURES	**FISSAGGIO**_FIXING	**FINITURE**_FINISHES						**OPZIONI**_OPTIONS			
		1.000h	304 500h	316 500h	500h	500h	PVD 500h	500h			
CLAC									EN-179	REI-60	IP-65

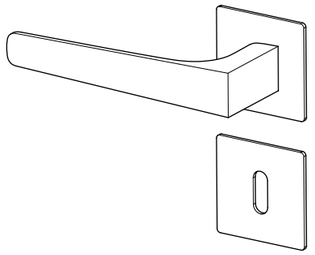

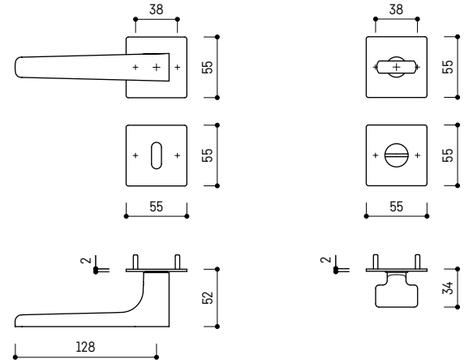

STANDARD TOILET SET

VERSIONI DISPONIBILI_AVAILABLE VERSIONS

CAPITOLATO_SPECIFICATION

ULTRACYCLE®

ULTRACYCLE® tested for over **1.000.000** cycles - **CLASS 4**

NORMA DIN EN 1906_DIN EN 1906 NORM

4 | 7 | - | 0 | 0 | 4 | 0 | A

Per una descrizione dettagliata di tutte le specifiche tecniche presenti nel prodotto, da impiegare nei capitolati o nelle offerte pubbliche, fate riferimento alla sezione CAPITOLATI_for a detailed description of all the technical informations contained in the product, to be used in the specifications or in public tenders, please refer to the SPECIFICATIONS section.

Descrizione_Description | **GAIUS**_design Leo De Carlo

ZAMAK

Supporto_Support | **EASYPIN 55x55x2mm**

												PLATINUM ABACO* 62	BLACK PEARL ABACO* 50	PLATINUM 03	BLACK PEARL 04	COPPER PEARL 5B	NOIR PEARL 08	COPPER SHINING 52	CRYSTAL SHINING 07	NATURAL GOLD 51	WHITE PEARL 02
8/135	CLAQ		35-45	-	38	Ø7	-	12	2	07861001	-	-	●	●	●	●	-	●	●	●
7/135	CLAQ		35-45	-	38	Ø7	-	12	2	07861002	-	-	●	●	●	●	-	●	●	●
-	CLAQ		-	-	38	Ø7	-	24	10	06548096	-	-	●	●	●	●	-	●	●	●
-	-		-	-	38	Ø7	-	24	10	06525175	-	-	●	●	●	●	-	●	●	●
-	-		-	-	38	Ø7	-	24	10	06525174	-	-	●	●	●	●	-	●	●	●
(8)/135	-		35-45	-	38	Ø7	-	4	6	05112252	-	-	●	●	●	●	-	●	●	●
(7)/135	-		35-45	-	38	Ø7	-	4	6	05112269	-	-	●	●	●	●	-	●	●	●
(6)/135	-		35-45	-	38	Ø7	-	4	6	05112270	-	-	●	●	●	●	-	●	●	●
(5)/135	-		35-45	-	38	Ø7	-	4	6	05112271	-	-	●	●	●	●	-	●	●	●
(4)/135	-		35-45	-	38	Ø7	-	4	6	05112272	-	-	●	●	●	●	-	●	●	●

KOBE

design Leo De Carlo

CE

BRASS | **ZAMAK** | ALU | AISI 316 | AISI 304

MANIGLIA PER PORTE INTERNE – SUPPORTO ø52x10mm_INTERNAL DOORS HANDLE – SUPPORT ø52x10mm

CARATTERISTICHE_FEATURES	**FISSAGGIO**_FIXING	**FINITURE**_FINISHES								**OPZIONI**_OPTIONS			
		1.000h	304 500h	316 500h	500h	500h	PVD 500h	500h		EN-179	REI-60	IP-65

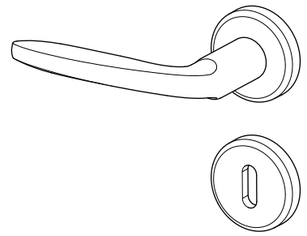

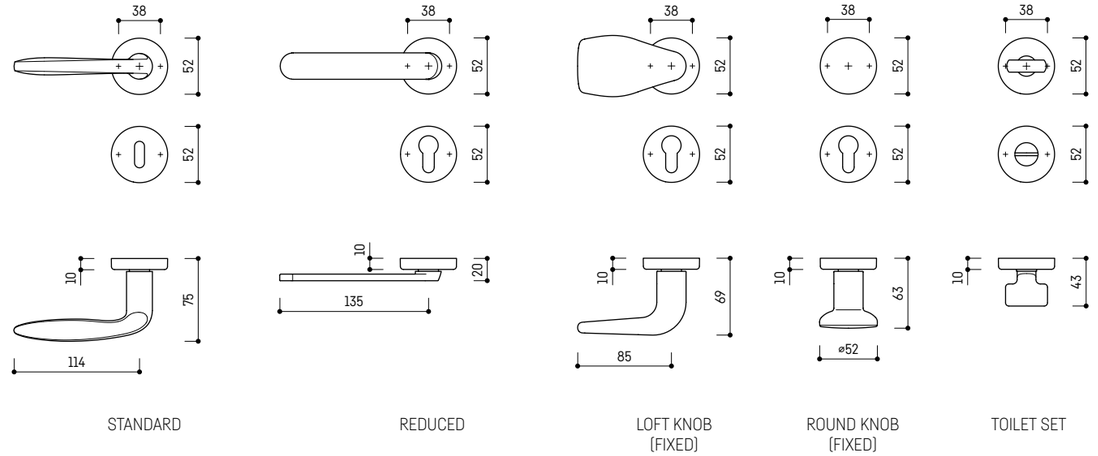

STANDARD | REDUCED | LOFT KNOB (FIXED) | ROUND KNOB (FIXED) | TOILET SET

VERSIONI DISPONIBILI_AVAILABLE VERSIONS

CAPITOLATO_SPECIFICATION

ULTRACYCLE®

ULTRACYCLE® tested for over **1.000.000** cycles - **CLASS 4**

NORMA DIN EN 1906_DIN EN 1906 NORM

4 | 7 | - | 0 | 0 | 4 | 0 | A

Per una descrizione dettagliata di tutte le specifiche tecniche presenti nel prodotto, da impiegare nei capitolati o nelle offerte pubbliche, fate riferimento alla sezione CAPITOLATI_for a detailed description of all the technical informations contained in the product, to be used in the specifications or in public tenders, please refer to the SPECIFICATIONS section.

Descrizione_Description KOBE_design Leo De Carlo

ZAMAK

Supporto_Support ø52x10mm

■	+			X							PLATINUM ABACO* 62	BLACK PEARL ABACO* 50	PLATINUM 03	BLACK PEARL 04	COPPER PEARL 5B	NOIR PEARL 08	COPPER SHINING 52	CRYSTAL SHINING 07	NATURAL GOLD 51	WHITE PEARL 02
8*	CLAC		-	3,9x25 3,9x50	38	Ø8	-	12	2	07402057	-	-	●	●	●	●	-	●	●	●
7*	CLAC		-	3,9x25 3,9x50	38	Ø8	-	12	2	07402058	-	-	●	●	●	●	-	●	●	●
8/135	CLAC		35-45	3,9x50	38	Ø8	-	12	2	07402054	-	-	●	●	●	●	-	●	●	●
8/135	CLAC		35-45	3,9x25 3,9x50	38	Ø8	-	12	2	07402053	-	-	●	●	●	●	-	●	●	●
7/135	CLAC		35-45	3,9x25 3,9x50	38	Ø8	-	12	2	07402005	-	-	●	●	●	●	-	●	●	●
8/135	CLAC		35-65	3,9x25	38	Ø8	-	12	2	07402055	-	-	●	●	●	●	-	●	●	●
7/135	CLAC		35-65	3,9x25	38	Ø8	-	12	2	07402056	-	-	●	●	●	●	-	●	●	●
8/135	CLAC		35-45	3,9x50	38	Ø8	-	12	2	07402060	-	-	●	●	●	●	-	●	●	●
8/135	CLAC		35-45	3,9x25 3,9x50	38	Ø8	-	12	2	07402061	-	-	●	●	●	●	-	●	●	●
7/135	CLAC		35-45	3,9x25 3,9x50	38	Ø8	-	12	2	07402006	-	-	●	●	●	●	-	●	●	●
8/135	CLAC		35-45	3,9x25	38	-	-	12	2	07402064	-	-	●	●	●	●	-	●	●	●
7/135	CLAC		35-45	3,9x25	38	-	-	12	2	07402065	-	-	●	●	●	●	-	●	●	●
8/135	CLAC		35-45	3,9x50	38	Ø8	-	12	2	07402059	-	-	●	●	●	●	-	●	●	●
8/160	CLAC		60-90	3,9x25 3,9x75 3,9x95	38	Ø8	-	12	2	07402067	-	-	●	●	●	●	-	●	●	●
8/135	CLAC		35-45	3,9x25 3,9x50	38	Ø8	-	12	2	07402066	-	-	●	●	●	●	-	●	●	●
8/160	CLAC		60-90	3,9x25 3,9x75 3,9x95	38	Ø8	-	12	2	07402068	-	-	●	●	●	●	-	●	●	●
7/135	CLAC		35-45	3,9x25 3,9x50	38	Ø8	-	12	2	07402007	-	-	●	●	●	●	-	●	●	●
7/160	CLAC		60-90	3,9x25 3,9x75 3,9x95	38	Ø8	-	12	2	07402069	-	-	●	●	●	●	-	●	●	●
8/135	CLAC		35-65	3,9x25	38	Ø8	-	12	2	07402062	-	-	●	●	●	●	-	●	●	●
8/160	CLAC		60-90	3,9x25	38	Ø8	-	12	2	07402070	-	-	●	●	●	●	-	●	●	●
7/135	CLAC		35-65	3,9x25	38	Ø8	-	12	2	07402063	-	-	●	●	●	●	-	●	●	●
7/160	CLAC		60-90	3,9x25	38	Ø8	-	12	2	07402071	-	-	●	●	●	●	-	●	●	●
(8)/135			35-45	3,9x50	38	Ø8	-	4	6	05112122	-	-	●	●	●	●	-	●	●	●

Descrizione_Description KOBE_design Leo De Carlo

ZAMAK

Supporto_Support ø52x10mm

■	+			X							PLATINUM ABACO* 62	BLACK PEARL ABACO* 50	PLATINUM 03	BLACK PEARL 04	COPPER PEARL 5B	NOIR PEARL 08	COPPER SHINING 52	CRYSTAL SHINING 07	NATURAL GOLD 51	WHITE PEARL 02
(8)/135			35-45	3,9x25 3,9x50	38	Ø8	-	4	6	05112110	-	-	●	●	●	●	-	●	●	●
(7)/135			35-45	3,9x25 3,9x50	38	Ø8	-	4	6	05112111	-	-	●	●	●	●	-	●	●	●
(6)/135			35-45	3,9x25 3,9x50	38	Ø8	-	4	6	05112112	-	-	●	●	●	●	-	●	●	●
(5)/135			35-45	3,9x25 3,9x50	38	Ø8	-	4	6	05112254	-	-	●	●	●	●	-	●	●	●
(4)/135			35-45	3,9x25 3,9x50	38	Ø8	-	4	6	05112113	-	-	●	●	●	●	-	●	●	●
8/135	CLAC		35-45	3,9x25 3,9x50	38	Ø8	-	12	1	19402005	-	-	●	●	●	●	-	●	●	●
7/135	CLAC		35-45	3,9x25 3,9x50	38	Ø8	-	12	1	19402006	-	-	●	●	●	●	-	●	●	●
8/155	CLAC		50-55	3,9x25 3,9x70	38	Ø8	-	12	1	19402007	-	-	●	●	●	●	-	●	●	●
7/155	CLAC		50-55	3,9x25 3,9x70	38	Ø8	-	12	1	19402008	-	-	●	●	●	●	-	●	●	●
8/165	CLAC		60-75	3,9x25 3,9x65 3,9x75 3,9x95	38	Ø8	-	12	1	19402009	-	-	●	●	●	●	-	●	●	●
7/165	CLAC		60-75	3,9x25 3,9x65 3,9x75 3,9x95	38	Ø8	-	12	1	19402010	-	-	●	●	●	●	-	●	●	●
8/175	CLAC		75-90	3,9x25 3,9x65 3,9x75 3,9x95	38	Ø8	-	12	1	19402011	-	-	●	●	●	●	-	●	●	●
7/175	CLAC		75-90	3,9x25 3,9x65 3,9x75 3,9x95	38	Ø8	-	12	1	19402012	-	-	●	●	●	●	-	●	●	●

Descrizione_Description **1/2 ferro ancora**_1/2 anchor spindle

STEEL

Supporto_Support -

■	+			X							MECHANISM 26
8/60	CLAC CC	-	-	-	-	-	-	10	8	06727462	●
8/70	CLAC CC	-	-	-	-	-	-	10	8	06727427	●
8/80	CLAC CC	-	-	-	-	-	-	10	8	06727428	●
8/90	CLAC CC	-	-	-	-	-	-	10	8	06727429	●
8/100	CLAC CC	-	-	-	-	-	-	10	8	06727463	●
7/60	CLAC CC	-	-	-	-	-	-	10	8	06727432	●
7/70	CLAC CC	-	-	-	-	-	-	10	8	06727433	●
7/80	CLAC CC	-	-	-	-	-	-	10	8	06727434	●
7/90	CLAC CC	-	-	-	-	-	-	10	8	06727435	●
7/100	CLAC CC	-	-	-	-	-	-	10	8	06727436	●

Descrizione_Description — **LOFT/ROUND** pomolo fisso_fixed knob

Supporto_Support — ø52x10mm

■	+			X							PLATINUM ABACO* 62	BLACK PEARL ABACO* 50	PLATINUM 03	BLACK PEARL 04	COPPER PEARL 5B	NOIR PEARL 08	COPPER SHINING 52	CRYSTAL SHINING 07	NATURAL GOLD 51	WHITE PEARL 02
7* or 8*			-	3,9x25 3,9x50	38	Ø8	-	12	1	17002001	-	-	●	●	●	●	-	●	●	●
7* or 8*			-	3,9x25 3,9x50	38	Ø8	-	12	1	19602001	-	-	●	●	●	●	-	●	●	●

Descrizione_Description — **1/2 ferro per pomolo fisso**_1/2 fixed knob spindle

Supporto_Support — -

■	+			X							MECHANISM 26
7/90		-	45-55	-	-	-	-	10	8	06727507	●
7/100		-	50-65	-	-	-	-	10	8	06727508	●
7/110		-	60-75	-	-	-	-	10	8	06727509	●
7/120		-	70-85	-	-	-	-	10	8	06727510	●
7/130		-	80-95	-	-	-	-	10	8	06727551	●
7/140		-	90-105	-	-	-	-	10	8	06727552	●
8/90		-	45-55	-	-	-	-	10	8	06727503	●
8/100		-	50-65	-	-	-	-	10	8	06727504	●
8/110		-	60-75	-	-	-	-	10	8	06727505	●
8/120		-	70-85	-	-	-	-	10	8	06727506	●
8/130		-	80-95	-	-	-	-	10	8	06727549	●
8/140		-	90-105	-	-	-	-	10	8	06727550	●

KOBE

design Leo De Carlo

BRASS · **ZAMAK** · ALU · AISI 316 · AISI 304

MANIGLIA PER PORTE INTERNE – SUPPORTO ø45X8mm_INTERNAL DOORS HANDLE – SUPPORT ø45X8mm

CARATTERISTICHE_FEATURES	**FISSAGGIO**_FIXING	**FINITURE**_FINISHES									**OPZIONI**_OPTIONS			
		1.000h	304 500h	316 500h	500h	500h	PVD 500h	500h		EN-179	REI-60	IP-65
CLAC												

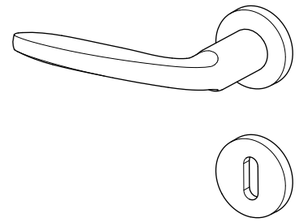

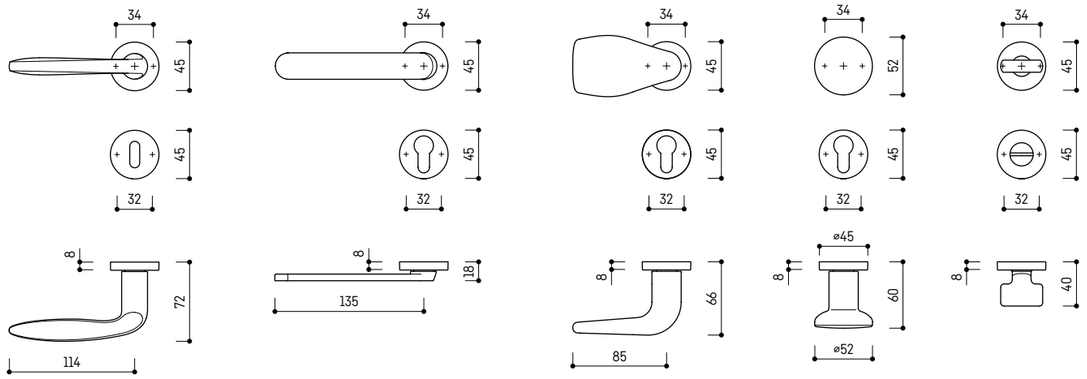

STANDARD · REDUCED · LOFT KNOB (FIXED) · ROUND KNOB (FIXED) · TOILET SET

VERSIONI DISPONIBILI_AVAILABLE VERSIONS

CAPITOLATO_SPECIFICATION — ULTRACYCLE®

ULTRACYCLE® tested for over **1.000.000** cycles - **CLASS 4**

NORMA DIN EN 1906_DIN EN 1906 NORM

4 | 7 | - | 0 | 0 | 4 | 0 | A

Per una descrizione dettagliata di tutte le specifiche tecniche presenti nel prodotto, da impiegare nei capitolati o nelle offerte pubbliche, fate riferimento alla sezione CAPITOLATI_for a detailed description of all the technical informations contained in the product, to be used in the specifications or in public tenders, please refer to the SPECIFICATIONS section.

Descrizione_Description **KOBE**_design Leo De Carlo

ZAMAK

Supporto_Support **ø45X8mm**

	■	+										PLATINUM ABACO® 62	BLACK PEARL ABACO® 50	PLATINUM PVD 03	BLACK PEARL PVD 04	COPPER PEARL PVD 5B	NOIR PEARL PVD 08	COPPER SHINING PVD 52	CRYSTAL SHINING PVD 07	NATURAL GOLD PVD 51	WHITE PEARL PVD 02
	8*	CLIAC		-	3,9x25	34/32	-	-	12	2	07477001	-	-	●	●	●	●	-	●	●	●
	7*	CLIAC		-	3,9x25	34/32	-	-	12	2	07477002	-	-	●	●	●	●	-	●	●	●
	8/135	CLIAC		35-45	3,9x25	34	-	-	12	2	07477003	-	-	●	●	●	●	-	●	●	●
	7/135	CLIAC		35-45	3,9x25	34	-	-	12	2	07477004	-	-	●	●	●	●	-	●	●	●
	8/135	CLIAC		35-45	3,9x25	34/32	-	-	12	2	07477005	-	-	●	●	●	●	-	●	●	●
	7/135	CLIAC		35-45	3,9x25	34/32	-	-	12	2	07477006	-	-	●	●	●	●	-	●	●	●
	8/135	CLIAC		35-65	3,9x25	34/32	-	-	12	2	07477007	-	-	●	●	●	●	-	●	●	●
	7/135	CLIAC		35-65	3,9x25	34/32	-	-	12	2	07477008	-	-	●	●	●	●	-	●	●	●
	8/160	CLIAC		60-90	3,9x25	34/32	-	-	12	2	07477009	-	-	●	●	●	●	-	●	●	●
	7/160	CLIAC		60-90	3,9x25	34/32	-	-	12	2	07477010	-	-	●	●	●	●	-	●	●	●
	(8)/135	-		35-45	3,9x25	34/32	-	-	4	6	05112197	-	-	●	●	●	●	-	●	●	●
	(7)/135	-		35-45	3,9x25	34/32	-	-	4	6	05112198	-	-	●	●	●	●	-	●	●	●
	(6)/135	-		35-45	3,9x25	34/32	-	-	4	6	05112199	-	-	●	●	●	●	-	●	●	●
	(5)/135	-		35-45	3,9x25	34/32	-	-	4	6	05112257	-	-	●	●	●	●	-	●	●	●
	(4)/135	-		35-45	3,9x25	34/32	-	-	4	6	05112200	-	-	●	●	●	●	-	●	●	●
	8/135	CLIAC		35-45	3,9x25	34	-	-	12	1	19477001	-	-	●	●	●	●	-	●	●	●
	7/135	CLIAC		35-45	3,9x25	34	-	-	12	1	19477002	-	-	●	●	●	●	-	●	●	●
	8/155	CLIAC		50-55	3,9x25	34	-	-	12	1	19477003	-	-	●	●	●	●	-	●	●	●
	7/155	CLIAC		50-55	3,9x25	34	-	-	12	1	19477004	-	-	●	●	●	●	-	●	●	●
	8/165	CLIAC		60-75	3,9x25	34	-	-	12	1	19477005	-	-	●	●	●	●	-	●	●	●
	7/165	CLIAC		60-75	3,9x25	34	-	-	12	1	19477006	-	-	●	●	●	●	-	●	●	●
	8/175	CLIAC		75-90	3,9x25	34	-	-	12	1	19477007	-	-	●	●	●	●	-	●	●	●
	7/175	CLIAC		75-90	3,9x25	34	-	-	12	1	19477008	-	-	●	●	●	●	-	●	●	●

Descrizione_Description **1/2 ferro ancora**_1/2 anchor spindle

STEEL

Supporto_Support -

	■	+										MECHANISM 26
	8/60	CLIAC CC	-	-	-	-	-	-	10	8	06727462	●
	8/70	CLIAC CC	-	-	-	-	-	-	10	8	06727427	●
	8/80	CLIAC CC	-	-	-	-	-	-	10	8	06727428	●
	8/90	CLIAC CC	-	-	-	-	-	-	10	8	06727429	●
	8/100	CLIAC CC	-	-	-	-	-	-	10	8	06727463	●
	7/60	CLIAC CC	-	-	-	-	-	-	10	8	06727432	●
	7/70	CLIAC CC	-	-	-	-	-	-	10	8	06727433	●
	7/80	CLIAC CC	-	-	-	-	-	-	10	8	06727434	●
	7/90	CLIAC CC	-	-	-	-	-	-	10	8	06727435	●
	7/100	CLIAC CC	-	-	-	-	-	-	10	8	06727436	●

Descrizione_Description **LOFT/ROUND** pomolo fisso_fixed knob

ZAMAK

Supporto_Support **ø45X8mm**

	■	+										PLATINUM ABACO® 62	BLACK PEARL ABACO® 50	PLATINUM PVD 03	BLACK PEARL PVD 04	COPPER PEARL PVD 5B	NOIR PEARL PVD 08	COPPER SHINING PVD 52	CRYSTAL SHINING PVD 07	NATURAL GOLD PVD 51	WHITE PEARL PVD 02
	7* or 8*	CLIAC		-	3,9x25	34	-	-	12	1	17077001	-	-	●	●	●	●	-	●	●	●
	7* or 8*	CLIAC		-	3,9x25	34	-	-	12	1	19677001	-	-	●	●	●	●	-	●	●	●

Descrizione_Description **1/2 ferro per pomolo fisso**_1/2 fixed knob spindle

STEEL

Supporto_Support -

	■	+										MECHANISM 26
	7/90	CLIAC CC	-	45-55	-	-	-	-	10	8	06727507	●
	7/100	CLIAC CC	-	50-65	-	-	-	-	10	8	06727508	●
	7/110	CLIAC CC	-	60-75	-	-	-	-	10	8	06727509	●
	7/120	CLIAC CC	-	70-85	-	-	-	-	10	8	06727510	●
	7/130	CLIAC CC	-	80-95	-	-	-	-	10	8	06727551	●
	7/140	CLIAC CC	-	90-105	-	-	-	-	10	8	06727552	●
	8/90	CLIAC CC	-	45-55	-	-	-	-	10	8	06727503	●
	8/100	CLIAC CC	-	50-65	-	-	-	-	10	8	06727504	●
	8/110	CLIAC CC	-	60-75	-	-	-	-	10	8	06727505	●
	8/120	CLIAC CC	-	70-85	-	-	-	-	10	8	06727506	●
	8/130	CLIAC CC	-	80-95	-	-	-	-	10	8	06727549	●
	8/140	CLIAC CC	-	90-105	-	-	-	-	10	8	06727550	●

KOBE

design Leo De Carlo

BRASS | **ZAMAK** | ALU | AISI 316 | AISI 304

MANIGLIA PER PORTE INTERNE – SUPPORTO MINIMAL ø25x2mm_INTERNAL DOORS HANDLE – SUPPORT MINIMAL ø25x2mm

CARATTERISTICHE_FEATURES	**FISSAGGIO**_FIXING	**FINITURE**_FINISHES	**OPZIONI**_OPTIONS
CLAQ		1.000h / 304 500h / 316 500h / 500h / 500h / PVD 500h / 500h	EN-179

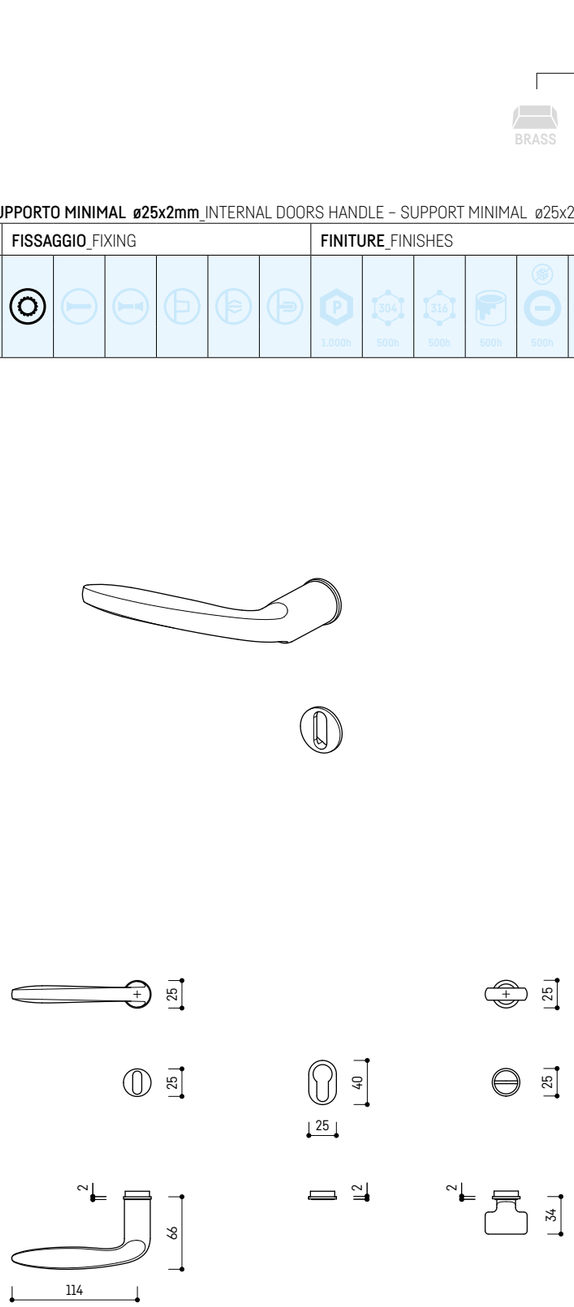

STANDARD TOILET SET

VERSIONI DISPONIBILI_AVAILABLE VERSIONS

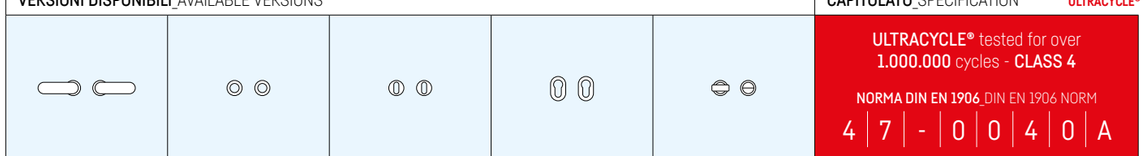

CAPITOLATO_SPECIFICATION

ULTRACYCLE®

ULTRACYCLE® tested for over **1.000.000** cycles - **CLASS 4**

NORMA DIN EN 1906_DIN EN 1906 NORM

4 | 7 | - | 0 | 0 | 4 | 0 | A

Per una descrizione dettagliata di tutte le specifiche tecniche presenti nel prodotto, da impiegare nei capitolati o nelle offerte pubbliche, fate riferimento alla sezione CAPITOLATI_for a detailed description of all the technical informations contained in the product, to be used in the specifications or in public tenders, please refer to the SPECIFICATIONS section.

Descrizione_Description: **KOBE**_design Leo De Carlo

ZAMAK

Supporto_Support: **MINIMAL ø25x2mm**

	■	+			X								PLATINUM ABACO* 62	BLACK PEARL ABACO* 50	PLATINUM 03	BLACK PEARL 04	COPPER PEARL 5B	NOIR PEARL 08	COPPER SHINING 52	CRYSTAL SHINING 07	NATURAL GOLD 51	WHITE PEARL 02
	8/135	CLAQ	◎	35-45	-	-	ø20	-	12	2	07446001		-	-	●	●	●	●	-	●	●	●
	7/135	CLAQ	◎	35-45	-	-	ø20	-	12	2	07446002		-	-	●	●	●	●	-	●	●	●
◎ ◎	-	CLAQ	◎	-	-	-	ø20	-	24	10	06548093		-	-	●	●	●	●	-	●	●	●
◍ ◍	-	-	◎	-	-	-	ø20	-	24	10	06525146		-	-	●	●	●	●	-	●	●	●
⬯ ⬯	-	-	◎	-	-	-	-	-	24	10	06525145		-	-	●	●	●	●	-	●	●	●
⊖ ⊖	(8)/135	-	◎	35-45	-	-	ø20	-	4	6	05112233		-	-	●	●	●	●	-	●	●	●
	(7)/135	-	◎	35-45	-	-	ø20	-	4	6	05112234		-	-	●	●	●	●	-	●	●	●
	(6)/135	-	◎	35-45	-	-	ø20	-	4	6	05112235		-	-	●	●	●	●	-	●	●	●
	(5)/135	-	◎	35-45	-	-	ø20	-	4	6	05112259		-	-	●	●	●	●	-	●	●	●
	(4)/135	-	◎	35-45	-	-	ø20	-	4	6	05112260		-	-	●	●	●	●	-	●	●	●

KOBE

design Leo De Carlo

BRASS | **ZAMAK** | ALU | AISI 316 | AISI 304

MANIGLIA PER PORTE INTERNE – SUPPORTO EASYPIN ø55x2mm INTERNAL DOORS HANDLE – SUPPORT EASYPIN ø55x2mm

CARATTERISTICHE FEATURES	**FISSAGGIO** FIXING	**FINITURE** FINISHES	**OPZIONI** OPTIONS
CLAQ		1.000h · 304 500h · 316 500h · 500h · 500h · PVD 500h · 500h	EN-179 · REI-60 · IP-65

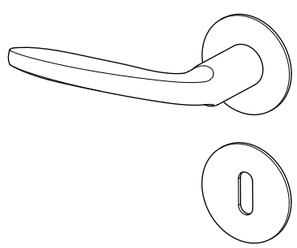

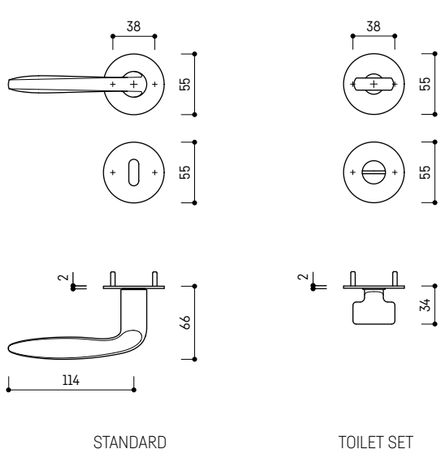

STANDARD TOILET SET

VERSIONI DISPONIBILI AVAILABLE VERSIONS					**CAPITOLATO** SPECIFICATION
					ULTRACYCLE® tested for over **1.000.000** cycles - **CLASS 4** **NORMA DIN EN 1906** DIN EN 1906 NORM 4 7 - 0 0 4 0 A
					Per una descrizione dettagliata di tutte le specifiche tecniche presenti nel prodotto, da impiegare nei capitolati o nelle offerte pubbliche, fate riferimento alla sezione CAPITOLATI for a detailed description of all the technical informations contained in the product, to be used in the specifications or in public tenders, please refer to the SPECIFICATIONS section.

Descrizione Description: KOBE design Leo De Carlo

ZAMAK

Supporto Support: EASYPIN ø55x2mm

■	+			X							PLATINUM ABACO* 62	BLACK PEARL ABACO* 50	PLATINUM 03	BLACK PEARL 04	COPPER PEARL 5B	NOIR PEARL 08	COPPER SHINING 52	CRYSTAL SHINING 07	NATURAL GOLD 51	WHITE PEARL 02
8/135	CLAQ		35-45	-	38	Ø7	-	12	2	07459001	-	-	●	●	●	●	-	●	●	●
7/135	CLAQ		35-45	-	38	Ø7	-	12	2	07459002	-	-	●	●	●	●	-	●	●	●
-	CLAQ		-	-	38	Ø7	-	24	10	06548077	-	-	●	●	●	●	-	●	●	●
-	-		-	-	38	Ø7	-	24	10	06525121	-	-	●	●	●	●	-	●	●	●
-	-		-	-	38	Ø7	-	24	10	06525120	-	-	●	●	●	●	-	●	●	●
(8)/135	-		35-45	-	38	Ø7	-	4	6	05112251	-	-	●	●	●	●	-	●	●	●
(7)/135	-		35-45	-	38	Ø7	-	4	6	05112261	-	-	●	●	●	●	-	●	●	●
(6)/135	-		35-45	-	38	Ø7	-	4	6	05112262	-	-	●	●	●	●	-	●	●	●
(5)/135	-		35-45	-	38	Ø7	-	4	6	05112263	-	-	●	●	●	●	-	●	●	●
(4)/135	-		35-45	-	38	Ø7	-	4	6	05112264	-	-	●	●	●	●	-	●	●	●

KOBE

design Leo De Carlo

BRASS | **ZAMAK** | ALU | AISI 316 | AISI 304

MANIGLIA PER PORTE INTERNE – SUPPORTO 40x235x9mm_INTERNAL DOORS HANDLE – SUPPORT 40x235x9mm

CARATTERISTICHE_FEATURES	FISSAGGIO_FIXING	FINITURE_FINISHES	OPZIONI_OPTIONS
CO, CLAQ, R		P 1.000h, 304 500h, 316 500h, 500h, 500h, PVD 500h, 500h	EN-179, REI-60, IP-65

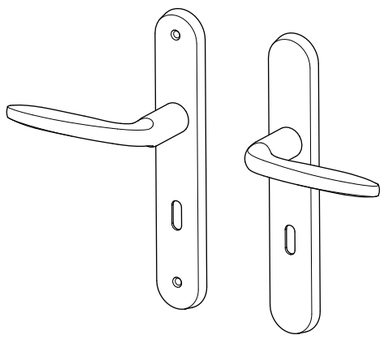

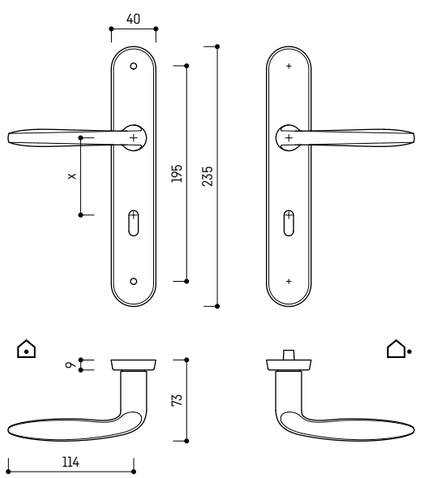

VERSIONI DISPONIBILI_AVAILABLE VERSIONS

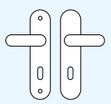
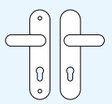
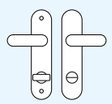

CAPITOLATO_SPECIFICATION

ULTRACYCLE®

ULTRACYCLE® tested for over **1.000.000** cycles - **CLASS 4**

NORMA DIN EN 1906_DIN EN 1906 NORM

4 | 7 | - | 0 | 0 | 4 | 0 | A

Per una descrizione dettagliata di tutte le specifiche tecniche presenti nel prodotto, da impiegare nei capitolati o nelle offerte pubbliche, fate riferimento alla sezione CAPITOLATI_for a detailed description of all the technical informations contained in the product, to be used in the specifications or in public tenders, please refer to the SPECIFICATIONS section.

Descrizione_Description: KOBE_design Leo De Carlo

ZAMAK

Supporto_Support: 40x235x9mm

												PLATINUM ABACO® 62	BLACK PEARL ABACO® 50	PLATINUM PVD 03	BLACK PEARL PVD 04	COPPER PEARL PVD 5B	NOIR PEARL PVD 08	COPPER SHINING PVD 52	CRYSTAL SHINING PVD 07	NATURAL GOLD PVD 51	WHITE PEARL PVD 02
	8/135	CLAQ		35-55	M4x75 SEC	195	Ø10	72	12	2	07401087	-	-	●	●	●	●	-	●	●	●
	7/135	CLAQ		35-55	M4x75 SEC	195	Ø10	70	12	2	07401089	-	-	●	●	●	●	-	●	●	●
	8/135	CLAQ		35-55	M4x75 SEC	195	Ø10	72	12	2	07401086	-	-	●	●	●	●	-	●	●	●
	7/135	CLAQ		35-55	M4x75 SEC	195	Ø10	70	12	2	07401013	-	-	●	●	●	●	-	●	●	●
	8(8)/135	CLAQ		35-55	M4x75 SEC	195	Ø10	78	12	2	07401088	-	-	●	●	●	●	-	●	●	●
	7(6)/135	CLAQ		35-55	M4x75 SEC	195	Ø10	70	12	2	07401030	-	-	●	●	●	●	-	●	●	●

BOTTICELLI

design Ufficio Tecnico Opentech

BRASS | **ZAMAK** | ALU | AISI 316 | AISI 304

MANIGLIA PER PORTE INTERNE – SUPPORTO ø52x10mm_INTERNAL DOORS HANDLE – SUPPORT ø52x10mm

CARATTERISTICHE_FEATURES	**FISSAGGIO**_FIXING	**FINITURE**_FINISHES	**OPZIONI**_OPTIONS
CLAQ		1.000h · 304 500h · 316 500h · 500h · 500h · PVD 500h · 500h	EN-179 · REI-60 · IP-65

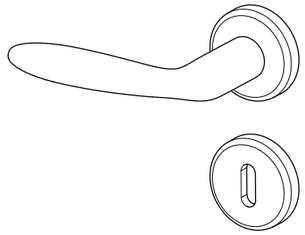

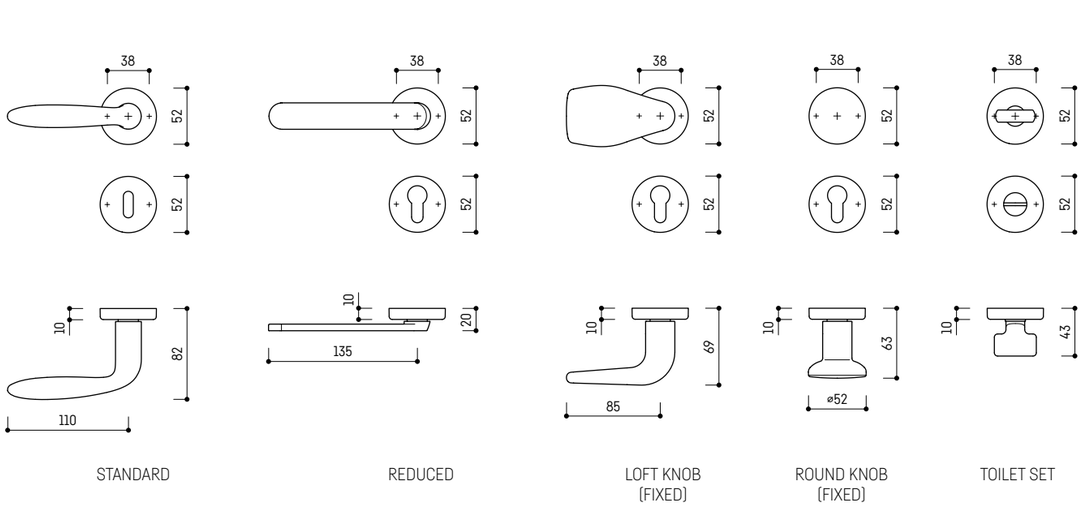

STANDARD · REDUCED · LOFT KNOB (FIXED) · ROUND KNOB (FIXED) · TOILET SET

VERSIONI DISPONIBILI_AVAILABLE VERSIONS

CAPITOLATO_SPECIFICATION

ULTRACYCLE®

ULTRACYCLE® tested for over **1.000.000** cycles - **CLASS 4**

NORMA DIN EN 1906_DIN EN 1906 NORM

4 | 7 | - | 0 | 0 | 4 | 0 | A

Per una descrizione dettagliata di tutte le specifiche tecniche presenti nel prodotto, da impiegare nei capitolati o nelle offerte pubbliche, fate riferimento alla sezione CAPITOLATI_for a detailed description of all the technical informations contained in the product, to be used in the specifications or in public tenders, please refer to the SPECIFICATIONS section.

Descrizione_Description: **BOTTICELLI**_design Ufficio Tecnico Opentech

ZAMAK

Supporto_Support: **ø52x10mm**

												PLATINUM ABACO* 62	BLACK PEARL ABACO* 50	PLATINUM 03	BLACK PEARL 04	COPPER PEARL 5B	NOIR PEARL 08	COPPER SHINING 52	CRYSTAL SHINING 07	NATURAL GOLD 51	WHITE PEARL 02
	8*	CLAQ		-	3,9x25 3,9x50	38	Ø8	-	12	2	14902042	-	-	●	●	●	●	-	●	●	●
	7*	CLAQ		-	3,9x25 3,9x50	38	Ø8	-	12	2	14902043	-	-	●	●	●	●	-	●	●	●
	8/135	CLAQ		35-45	3,9x50	38	Ø8	-	12	2	14902044	-	-	●	●	●	●	-	●	●	●
	8/135	CLAQ		35-45	3,9x25 3,9x50	38	Ø8	-	12	2	14902041	-	-	●	●	●	●	-	●	●	●
	7/135	CLAQ		35-45	3,9x25 3,9x50	38	Ø8	-	12	2	14902001	-	-	●	●	●	●	-	●	●	●
	8/135	CLAQ		35-65	3,9x25	38	Ø8	-	12	2	14902045	-	-	●	●	●	●	-	●	●	●
	7/135	CLAQ		35-65	3,9x25	38	Ø8	-	12	2	14902046	-	-	●	●	●	●	-	●	●	●
	8/135	CLAQ		35-45	3,9x50	38	Ø8	-	12	2	14902048	-	-	●	●	●	●	-	●	●	●
	8/135	CLAQ		35-45	3,9x25 3,9x50	38	Ø8	-	12	2	14902050	-	-	●	●	●	●	-	●	●	●
	7/135	CLAQ		35-45	3,9x25 3,9x50	38	Ø8	-	12	2	14902005	-	-	●	●	●	●	-	●	●	●
	8/135	CLAQ		35-45	3,9x25	38	-	-	12	2	14902053	-	-	●	●	●	●	-	●	●	●
	7/135	CLAQ		35-45	3,9x25	38	-	-	12	2	14902054	-	-	●	●	●	●	-	●	●	●
	8/135	CLAQ		35-45	3,9x50	38	Ø8	-	12	2	14902047	-	-	●	●	●	●	-	●	●	●
	8/160	CLAQ		60-90	3,9x25 3,9x75 3,9x95	38	Ø8	-	12	2	14902055	-	-	●	●	●	●	-	●	●	●
	8/135	CLAQ		35-45	3,9x25 3,9x50	38	Ø8	-	12	2	14902049	-	-	●	●	●	●	-	●	●	●
	8/160	CLAQ		60-90	3,9x25 3,9x75 3,9x95	38	Ø8	-	12	2	14902056	-	-	●	●	●	●	-	●	●	●
	7/135	CLAQ		35-45	3,9x25 3,9x50	38	Ø8	-	12	2	14902015	-	-	●	●	●	●	-	●	●	●
	7/160	CLAQ		60-90	3,9x25 3,9x75 3,9x95	38	Ø8	-	12	2	14902057	-	-	●	●	●	●	-	●	●	●
	8/135	CLAQ		35-65	3,9x25	38	Ø8	-	12	2	14902051	-	-	●	●	●	●	-	●	●	●
	8/160	CLAQ		60-90	3,9x25	38	Ø8	-	12	2	14902058	-	-	●	●	●	●	-	●	●	●
	7/135	CLAQ		35-65	3,9x25	38	Ø8	-	12	2	14902052	-	-	●	●	●	●	-	●	●	●
	7/160	CLAQ		60-90	3,9x25	38	Ø8	-	12	2	14902059	-	-	●	●	●	●	-	●	●	●
	(8)/135			35-45	3,9x50	38	Ø8	-	4	6	05112122	-	-	●	●	●	●	-	●	●	●

Descrizione_Description **BOTTICELLI**_design Ufficio Tecnico Opentech

Supporto_Support **ZAMAK**

ø52x10mm

												PLATINUM ABACO* 62	BLACK PEARL ABACO* 50	PLATINUM 03	BLACK PEARL 04	COPPER PEARL 5B	NOIR PEARL 08	COPPER SHINING 52	CRYSTAL SHINING 07	NATURAL GOLD 51	WHITE PEARL 02
	(8)/135			35-45	3,9x25 3,9x50	38	Ø8	-	4	6	05112110	-	-	●	●	●	●	-	●	●	●
	(7)/135			35-45	3,9x25 3,9x50	38	Ø8	-	4	6	05112111	-	-	●	●	●	●	-	●	●	●
	(6)/135			35-45	3,9x25 3,9x50	38	Ø8	-	4	6	05112112	-	-	●	●	●	●	-	●	●	●
	(5)/135			35-45	3,9x25 3,9x50	38	Ø8	-	4	6	05112254	-	-	●	●	●	●	-	●	●	●
	(4)/135			35-45	3,9x25 3,9x50	38	Ø8	-	4	6	05112113	-	-	●	●	●	●	-	●	●	●
	8/135	GLAS		35-45	3,9x25 3,9x50	38	Ø8	-	12	1	19402005	-	-	●	●	●	●	-	●	●	●
	7/135	GLAS		35-45	3,9x25 3,9x50	38	Ø8	-	12	1	19402006	-	-	●	●	●	●	-	●	●	●
	8/155	GLAS		50-55	3,9x25 3,9x70	38	Ø8	-	12	1	19402007	-	-	●	●	●	●	-	●	●	●
	7/155	GLAS		50-55	3,9x25 3,9x70	38	Ø8	-	12	1	19402008	-	-	●	●	●	●	-	●	●	●
	8/165	GLAS		60-75	3,9x25 3,9x65 3,9x75 3,9x95	38	Ø8	-	12	1	19402009	-	-	●	●	●	●	-	●	●	●
	7/165	GLAS		60-75	3,9x25 3,9x65 3,9x75 3,9x95	38	Ø8	-	12	1	19402010	-	-	●	●	●	●	-	●	●	●
	8/175	GLAS		75-90	3,9x25 3,9x65 3,9x75 3,9x95	38	Ø8	-	12	1	19402011	-	-	●	●	●	●	-	●	●	●
	7/175	GLAS		75-90	3,9x25 3,9x65 3,9x75 3,9x95	38	Ø8	-	12	1	19402012	-	-	●	●	●	●	-	●	●	●

Descrizione_Description **1/2 ferro ancora**_1/2 anchor spindle

Supporto_Support **STEEL**

-

											MECHANISM 26
	8/60	GLAS CO	-	-	-	-	-	-	10	8	06727462	●
	8/70	GLAS CO	-	-	-	-	-	-	10	8	06727427	●
	8/80	GLAS CO	-	-	-	-	-	-	10	8	06727428	●
	8/90	GLAS CO	-	-	-	-	-	-	10	8	06727429	●
	8/100	GLAS CO	-	-	-	-	-	-	10	8	06727463	●
	7/60	GLAS CO	-	-	-	-	-	-	10	8	06727432	●
	7/70	GLAS CO	-	-	-	-	-	-	10	8	06727433	●
	7/80	GLAS CO	-	-	-	-	-	-	10	8	06727434	●
	7/90	GLAS CO	-	-	-	-	-	-	10	8	06727435	●
	7/100	GLAS CO	-	-	-	-	-	-	10	8	06727436	●

Descrizione_Description **LOFT/ROUND** pomolo fisso_fixed knob

Supporto_Support **ZAMAK**

ø52x10mm

												PLATINUM ABACO* 62	BLACK PEARL ABACO* 50	PLATINUM 03	BLACK PEARL 04	COPPER PEARL 5B	NOIR PEARL 08	COPPER SHINING 52	CRYSTAL SHINING 07	NATURAL GOLD 51	WHITE PEARL 02
	7* or 8*	GLAS		-	3,9x25 3,9x50	38	Ø8	-	12	1	17002001	-	-	●	●	●	●	-	●	●	●
	7* or 8*	GLAS		-	3,9x25 3,9x50	38	Ø8	-	12	1	19602001	-	-	●	●	●	●	-	●	●	●

Descrizione_Description **1/2 ferro per pomolo fisso**_1/2 fixed knob spindle

Supporto_Support **STEEL**

-

												MECHANISM 26
	7/90	GLAS CO	-	45-55	-	-	-	-	10	8	06727507	●
	7/100	GLAS CO	-	50-65	-	-	-	-	10	8	06727508	●
	7/110	GLAS CO	-	60-75	-	-	-	-	10	8	06727509	●
	7/120	GLAS CO	-	70-85	-	-	-	-	10	8	06727510	●
	7/130	GLAS CO	-	80-95	-	-	-	-	10	8	06727551	●
	7/140	GLAS CO	-	90-105	-	-	-	-	10	8	06727552	●
	8/90	GLAS CO	-	45-55	-	-	-	-	10	8	06727503	●
	8/100	GLAS CO	-	50-65	-	-	-	-	10	8	06727504	●
	8/110	GLAS CO	-	60-75	-	-	-	-	10	8	06727505	●
	8/120	GLAS CO	-	70-85	-	-	-	-	10	8	06727506	●
	8/130	GLAS CO	-	80-95	-	-	-	-	10	8	06727549	●
	8/140	GLAS CO	-	90-105	-	-	-	-	10	8	06727550	●

BOTTICELLI

design Ufficio Tecnico Opentech

BRASS | **ZAMAK** | ALU | AISI 316 | AISI 304

MANIGLIA PER PORTE INTERNE – SUPPORTO ø45X8mm_INTERNAL DOORS HANDLE – SUPPORT ø45X8mm

CARATTERISTICHE_FEATURES	**FISSAGGIO**_FIXING	**FINITURE**_FINISHES	**OPZIONI**_OPTIONS
CLAQ		1.000h · 500h · 500h · 500h · 500h · PVD 500h · 500h	EN-179

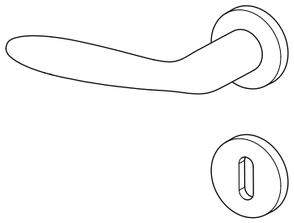

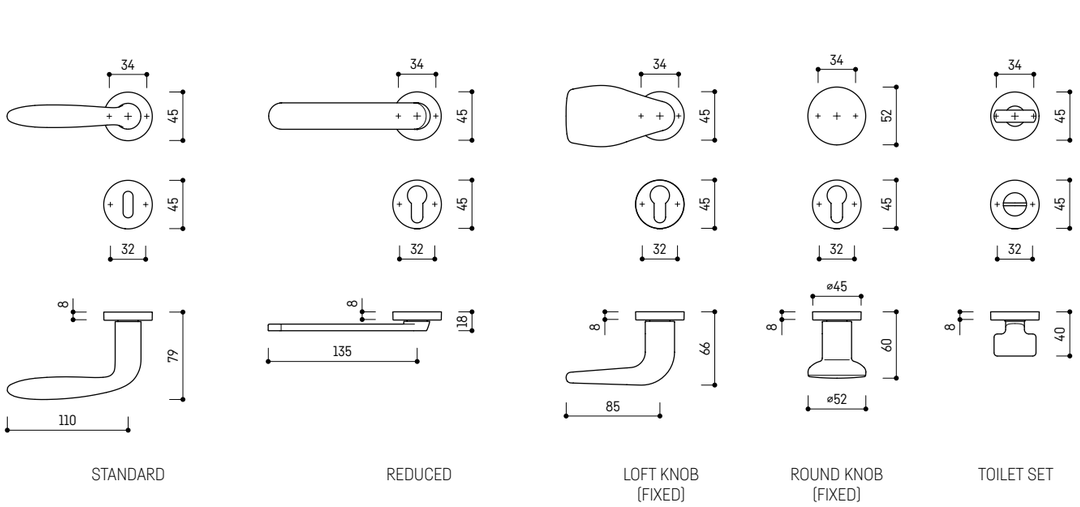

STANDARD | REDUCED | LOFT KNOB (FIXED) | ROUND KNOB (FIXED) | TOILET SET

VERSIONI DISPONIBILI_AVAILABLE VERSIONS

CAPITOLATO_SPECIFICATION

ULTRACYCLE®

ULTRACYCLE® tested for over **1.000.000** cycles - **CLASS 4**

NORMA DIN EN 1906_DIN EN 1906 NORM

4 | 7 | - | 0 | 0 | 4 | 0 | A

Per una descrizione dettagliata di tutte le specifiche tecniche presenti nel prodotto, da impiegare nei capitolati o nelle offerte pubbliche, fate riferimento alla sezione CAPITOLATI_for a detailed description of all the technical informations contained in the product, to be used in the specifications or in public tenders, please refer to the SPECIFICATIONS section.

Descrizione_Description: **BOTTICELLI**_design Ufficio Tecnico Opentech

ZAMAK

Supporto_Support: **ø45X8mm**

■	+	X	X	PLATINUM ABACO* 62	BLACK PEARL ABACO* 50	PLATINUM 03	BLACK PEARL 04	COPPER PEARL 5B	NOIR PEARL 08	COPPER SHINING 52	CRYSTAL SHINING 07	NATURAL GOLD 51	WHITE PEARL 02
8*	CLAQ	-	3,9x25	34/32	-	-	12	2	14977004	-	-	●	●	●	●	-	●	●	●
7*	CLAQ	-	3,9x25	34/32	-	-	12	2	14977005	-	-	●	●	●	●	-	●	●	●
8/135	CLAQ	35-45	3,9x25	34	-	-	12	2	14977006	-	-	●	●	●	●	-	●	●	●
7/135	CLAQ	35-45	3,9x25	34	-	-	12	2	14977007	-	-	●	●	●	●	-	●	●	●
8/135	CLAQ	35-45	3,9x25	34/32	-	-	12	2	14977010	-	-	●	●	●	●	-	●	●	●
7/135	CLAQ	35-45	3,9x25	34/32	-	-	12	2	14977011	-	-	●	●	●	●	-	●	●	●
8/135	CLAQ	35-65	3,9x25	34/32	-	-	12	2	14977008	-	-	●	●	●	●	-	●	●	●
7/135	CLAQ	35-65	3,9x25	34/32	-	-	12	2	14977009	-	-	●	●	●	●	-	●	●	●
8/160	CLAQ	60-90	3,9x25	34/32	-	-	12	2	14977012	-	-	●	●	●	●	-	●	●	●
7/160	CLAQ	60-90	3,9x25	34/32	-	-	12	2	14977013	-	-	●	●	●	●	-	●	●	●
(8)/135	-	35-45	3,9x25	34/32	-	-	4	6	05112197	-	-	●	●	●	●	-	●	●	●
(7)/135	-	35-45	3,9x25	34/32	-	-	4	6	05112198	-	-	●	●	●	●	-	●	●	●
(6)/135	-	35-45	3,9x25	34/32	-	-	4	6	05112199	-	-	●	●	●	●	-	●	●	●
(5)/135	-	35-45	3,9x25	34/32	-	-	4	6	05112257	-	-	●	●	●	●	-	●	●	●
(4)/135	-	35-45	3,9x25	34/32	-	-	4	6	05112200	-	-	●	●	●	●	-	●	●	●
8/135	CLAQ	35-45	3,9x25	34	-	-	12	1	19477001	-	-	●	●	●	●	-	●	●	●
7/135	CLAQ	35-45	3,9x25	34	-	-	12	1	19477002	-	-	●	●	●	●	-	●	●	●
8/155	CLAQ	50-55	3,9x25	34	-	-	12	1	19477003	-	-	●	●	●	●	-	●	●	●
7/155	CLAQ	50-55	3,9x25	34	-	-	12	1	19477004	-	-	●	●	●	●	-	●	●	●
8/165	CLAQ	60-75	3,9x25	34	-	-	12	1	19477005	-	-	●	●	●	●	-	●	●	●
7/165	CLAQ	60-75	3,9x25	34	-	-	12	1	19477006	-	-	●	●	●	●	-	●	●	●
8/175	CLAQ	75-90	3,9x25	34	-	-	12	1	19477007	-	-	●	●	●	●	-	●	●	●
7/175	CLAQ	75-90	3,9x25	34	-	-	12	1	19477008	-	-	●	●	●	●	-	●	●	●

Descrizione_Description **1/2 ferro ancora**_1/2 anchor spindle

STEEL

Supporto_Support -

												MECHANISM 26
8/60	CLAQ CE	-	-	-	-	-	-	10	8	06727462		●
8/70	CLAQ CE	-	-	-	-	-	-	10	8	06727427		●
8/80	CLAQ CE	-	-	-	-	-	-	10	8	06727428		●
8/90	CLAQ CE	-	-	-	-	-	-	10	8	06727429		●
8/100	CLAQ CE	-	-	-	-	-	-	10	8	06727463		●
7/60	CLAQ CE	-	-	-	-	-	-	10	8	06727432		●
7/70	CLAQ CE	-	-	-	-	-	-	10	8	06727433		●
7/80	CLAQ CE	-	-	-	-	-	-	10	8	06727434		●
7/90	CLAQ CE	-	-	-	-	-	-	10	8	06727435		●
7/100	CLAQ CE	-	-	-	-	-	-	10	8	06727436		●

Descrizione_Description **LOFT/ROUND** pomolo fisso_fixed knob

ZAMAK

Supporto_Support **ø45X8mm**

												PLATINUM ABACO® 62	BLACK PEARL ABACO® 50	PLATINUM PVD 03	BLACK PEARL PVD 04	COPPER PEARL PVD 5B	NOIR PEARL PVD 08	COPPER SHINING PVD 52	CRYSTAL SHINING PVD 07	NATURAL GOLD PVD 51	WHITE PEARL PVD 02
7" or 8"	CLAQ	-	-	3,9x25	34	-	-	12	1	17077001		-	-	●	●	●	●	-	●	●	●
7" or 8"	CLAQ	-	-	3,9x25	34	-	-	12	1	19677001		-	-	●	●	●	●	-	●	●	●

Descrizione_Description **1/2 ferro per pomolo fisso**_1/2 fixed knob spindle

STEEL

Supporto_Support -

											MECHANISM 26
7/90	CLAQ CE	-	45-55	-	-	-	-	10	8	06727507	●
7/100	CLAQ CE	-	50-65	-	-	-	-	10	8	06727508	●
7/110	CLAQ CE	-	60-75	-	-	-	-	10	8	06727509	●
7/120	CLAQ CE	-	70-85	-	-	-	-	10	8	06727510	●
7/130	CLAQ CE	-	80-95	-	-	-	-	10	8	06727551	●
7/140	CLAQ CE	-	90-105	-	-	-	-	10	8	06727552	●
8/90	CLAQ CE	-	45-55	-	-	-	-	10	8	06727503	●
8/100	CLAQ CE	-	50-65	-	-	-	-	10	8	06727504	●
8/110	CLAQ CE	-	60-75	-	-	-	-	10	8	06727505	●
8/120	CLAQ CE	-	70-85	-	-	-	-	10	8	06727506	●
8/130	CLAQ CE	-	80-95	-	-	-	-	10	8	06727549	●
8/140	CLAQ CE	-	90-105	-	-	-	-	10	8	06727550	●

BOTTICELLI

design Ufficio Tecnico Opentech

CE

BRASS | **ZAMAK** | ALU | AISI 316 | AISI 304

MANIGLIA PER PORTE INTERNE – SUPPORTO MINIMAL ø25x2mm_INTERNAL DOORS HANDLE – SUPPORT MINIMAL ø25x2mm

CARATTERISTICHE_FEATURES	**FISSAGGIO**_FIXING	**FINITURE**_FINISHES	**OPZIONI**_OPTIONS
CLAQ		1.000h · 500h · 500h · 500h · 500h · PVD 500h · 500h	EN-179 · REI-60 · IP-65

STANDARD TOILET SET

VERSIONI DISPONIBILI_AVAILABLE VERSIONS

CAPITOLATO_SPECIFICATION

ULTRACYCLE®

ULTRACYCLE® tested for over **1.000.000** cycles - **CLASS 4**

NORMA DIN EN 1906_DIN EN 1906 NORM

4 | 7 | - | 0 | 0 | 4 | 0 | A

Per una descrizione dettagliata di tutte le specifiche tecniche presenti nel prodotto, da impiegare nei capitolati o nelle offerte pubbliche, fate riferimento alla sezione CAPITOLATI_for a detailed description of all the technical informations contained in the product, to be used in the specifications or in public tenders, please refer to the SPECIFICATIONS section.

Descrizione_Description | **BOTTICELLI**_design Ufficio Tecnico Opentech

ZAMAK

Supporto_Support | **MINIMAL ø25x2mm**

	■	+										PLATINUM ABACO* 62	BLACK PEARL ABACO* 50	PLATINUM 03	BLACK PEARL 04	COPPER PEARL 5B	NOIR PEARL 08	COPPER SHINING 52	CRYSTAL SHINING 07	NATURAL GOLD 51	WHITE PEARL 02
	8/135	CLAC		35-45	-	-	ø20	-	12	2	14946001	-	-	●	●	●	●	-	●	●	●
	7/135	CLAC		35-45	-	-	ø20	-	12	2	14946002	-	-	●	●	●	●	-	●	●	●
	-	CLAC		-	-	-	ø20	-	24	10	06548093	-	-	●	●	●	●	-	●	●	●
	-	-		-	-	-	ø20	-	24	10	06525146	-	-	●	●	●	●	-	●	●	●
	-	-		-	-	-	-	-	24	10	06525145	-	-	●	●	●	●	-	●	●	●
	(8)/135	-		35-45	-	-	ø20	-	4	6	05112233	-	-	●	●	●	●	-	●	●	●
	(7)/135	-		35-45	-	-	ø20	-	4	6	05112234	-	-	●	●	●	●	-	●	●	●
	(6)/135	-		35-45	-	-	ø20	-	4	6	05112235	-	-	●	●	●	●	-	●	●	●
	(5)/135	-		35-45	-	-	ø20	-	4	6	05112259	-	-	●	●	●	●	-	●	●	●
	(4)/135	-		35-45	-	-	ø20	-	4	6	05112260	-	-	●	●	●	●	-	●	●	●

BOTTICELLI

design Ufficio Tecnico Opentech

CE

BRASS | **ZAMAK** | ALU | AISI 316 | AISI 304

MANIGLIA PER PORTE INTERNE – SUPPORTO EASYPIN ø55x2mm_INTERNAL DOORS HANDLE – SUPPORT EASYPIN ø55x2mm

CARATTERISTICHE_FEATURES					**FISSAGGIO**_FIXING						**FINITURE**_FINISHES							**OPZIONI**_OPTIONS			
	CLAC										P 1.000h	304 500h	316 500h	500h	500h	PVD 500h	500h		EN-179	REI-60	IP-65

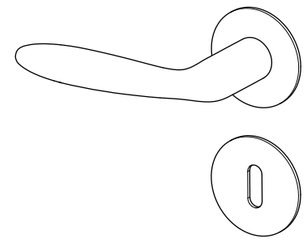

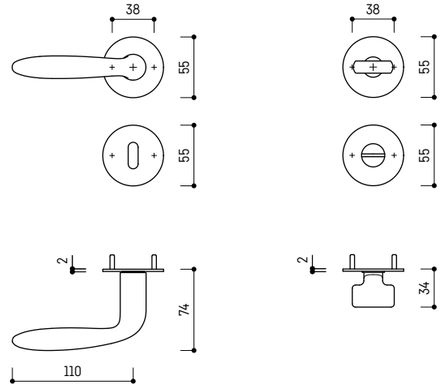

STANDARD TOILET SET

VERSIONI DISPONIBILI_AVAILABLE VERSIONS

CAPITOLATO_SPECIFICATION

ULTRACYCLE®

ULTRACYCLE® tested for over **1.000.000** cycles - **CLASS 4**

NORMA DIN EN 1906_DIN EN 1906 NORM

4 | 7 | - | 0 | 0 | 4 | 0 | A

Per una descrizione dettagliata di tutte le specifiche tecniche presenti nel prodotto, da impiegare nei capitolati o nelle offerte pubbliche, fate riferimento alla sezione CAPITOLATI_for a detailed description of all the technical informations contained in the product, to be used in the specifications or in public tenders, please refer to the SPECIFICATIONS section.

Descrizione_Description | **BOTTICELLI**_design Ufficio Tecnico Opentech

ZAMAK

Supporto_Support | **EASYPIN ø55x2mm**

												PLATINUM ABACO* 62	BLACK PEARL ABACO* 50	PLATINUM 03	BLACK PEARL 04	COPPER PEARL 5B	NOIR PEARL 08	COPPER SHINING 52	CRYSTAL SHINING 07	NATURAL GOLD 51	WHITE PEARL 02
	■	+		x		x															
	8/135	CLAQ		35-45	-	38	Ø7	-	12	2	14959001	-	-	●	●	●	●	-	●	●	●
	7/135	CLAQ		35-45	-	38	Ø7	-	12	2	14959002	-	-	●	●	●	●	-	●	●	●
	-	CLAQ		-	-	38	Ø7	-	24	10	06548077	-	-	●	●	●	●	-	●	●	●
	-	-		-	-	38	Ø7	-	24	10	06525121	-	-	●	●	●	●	-	●	●	●
	-	-		-	-	38	Ø7	-	24	10	06525120	-	-	●	●	●	●	-	●	●	●
	(8)/135	-		35-45	-	38	Ø7	-	4	6	05112251	-	-	●	●	●	●	-	●	●	●
	(7)/135	-		35-45	-	38	Ø7	-	4	6	05112261	-	-	●	●	●	●	-	●	●	●
	(6)/135	-		35-45	-	38	Ø7	-	4	6	05112262	-	-	●	●	●	●	-	●	●	●
	(5)/135	-		35-45	-	38	Ø7	-	4	6	05112263	-	-	●	●	●	●	-	●	●	●
	(4)/135	-		35-45	-	38	Ø7	-	4	6	05112264	-	-	●	●	●	●	-	●	●	●

BOTTICELLI

design Ufficio Tecnico Opentech

CE

BRASS | **ZAMAK** | ALU | AISI 316 | AISI 304

MANIGLIA PER PORTE INTERNE – SUPPORTO 40x235x9mm_INTERNAL DOORS HANDLE – SUPPORT 40x235x9mm

CARATTERISTICHE_FEATURES	**FISSAGGIO**_FIXING	**FINITURE**_FINISHES	**OPZIONI**_OPTIONS
CLAQ		1.000h · 500h · 500h · 500h · 500h · PVD 500h · 500h	EN-179

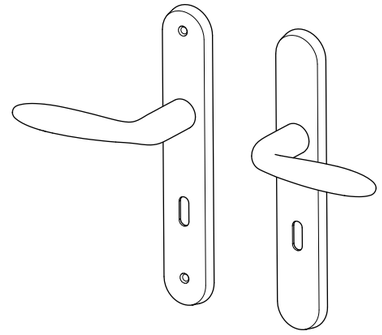

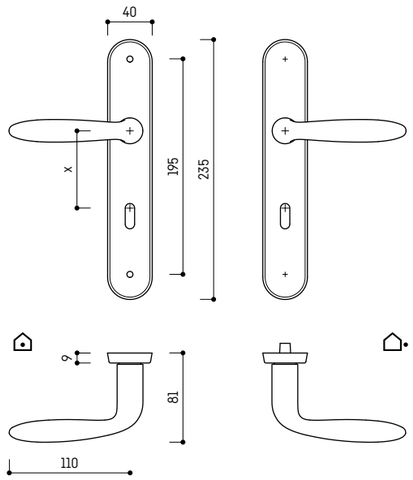

VERSIONI DISPONIBILI_AVAILABLE VERSIONS

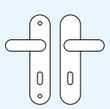
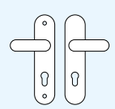
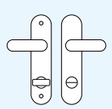

CAPITOLATO_SPECIFICATION

ULTRACYCLE®

ULTRACYCLE® tested for over **1.000.000** cycles - **CLASS 4**

NORMA DIN EN 1906_DIN EN 1906 NORM

4 | 7 | - | 0 | 0 | 4 | 0 | A

Per una descrizione dettagliata di tutte le specifiche tecniche presenti nel prodotto, da impiegare nei capitolati o nelle offerte pubbliche, fate riferimento alla sezione CAPITOLATI_for a detailed description of all the technical informations contained in the product, to be used in the specifications or in public tenders, please refer to the SPECIFICATIONS section.

Descrizione_Description | **BOTTICELLI**_design Ufficio Tecnico Opentech

ZAMAK

Supporto_Support | **40x235x9mm**

	■	+										PLATINUM ABACO* 62	BLACK PEARL ABACO* 50	PLATINUM 03	BLACK PEARL 04	COPPER PEARL 5B	NOIR PEARL 08	COPPER SHINING 52	CRYSTAL SHINING 07	NATURAL GOLD 51	WHITE PEARL 02
	8/135	CLAQ		35-55	M4x75 SEC	195	Ø10	72	12	2	14901059	-	-	●	●	●	●	-	●	●	●
	7/135	CLAQ		35-55	M4x75 SEC	195	Ø10	70	12	2	14901062	-	-	●	●	●	●	-	●	●	●
	8/135	CLAQ		35-55	M4x75 SEC	195	Ø10	72	12	2	14901058	-	-	●	●	●	●	-	●	●	●
	7/135	CLAQ		35-55	M4x75 SEC	195	Ø10	70	12	2	14901061	-	-	●	●	●	●	-	●	●	●
	8(8)/135	CLAQ		35-55	M4x75 SEC	195	Ø10	78	12	2	14901060	-	-	●	●	●	●	-	●	●	●
	7(6)/135	CLAQ		35-55	M4x75 SEC	195	Ø10	70	12	2	14901063	-	-	●	●	●	●	-	●	●	●

DODO

design Ufficio Tecnico Opentech

BRASS | **ZAMAK** | ALU | AISI 316 | AISI 304

MANIGLIA PER PORTE INTERNE – SUPPORTO ø52x10mm_INTERNAL DOORS HANDLE – SUPPORT ø52x10mm

CARATTERISTICHE_FEATURES	**FISSAGGIO**_FIXING	**FINITURE**_FINISHES										**OPZIONI**_OPTIONS			
		1.000h	304 500h	316 500h	500h	500h	PVD 500h	500h		EN-179	REI-60	IP-65

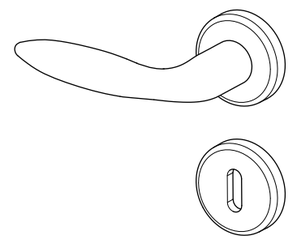

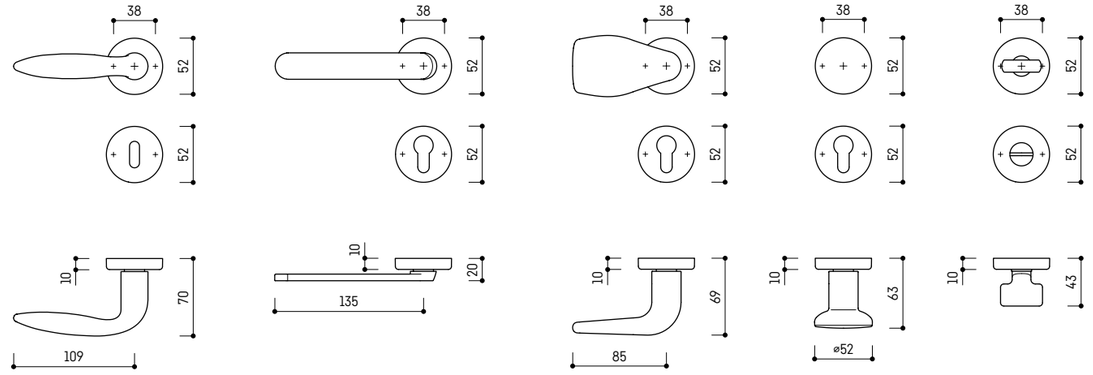

STANDARD | REDUCED | LOFT KNOB [FIXED] | ROUND KNOB [FIXED] | TOILET SET

VERSIONI DISPONIBILI_AVAILABLE VERSIONS

CAPITOLATO_SPECIFICATION

ULTRACYCLE®

ULTRACYCLE® tested for over **1.000.000** cycles - **CLASS 4**

NORMA DIN EN 1906_DIN EN 1906 NORM

4 | 7 | - | 0 | 0 | 4 | 0 | A

Per una descrizione dettagliata di tutte le specifiche tecniche presenti nel prodotto, da impiegare nei capitolati o nelle offerte pubbliche, fate riferimento alla sezione CAPITOLATI_for a detailed description of all the technical informations contained in the product, to be used in the specifications or in public tenders, please refer to the SPECIFICATIONS section.

Descrizione_Description DODO_design Ufficio Tecnico Opentech

ZAMAK

Supporto_Support ø52x10mm

■	+										PLATINUM ABACO* 62	BLACK PEARL ABACO* 50	PLATINUM 03	BLACK PEARL 04	COPPER PEARL 5B	NOIR PEARL 08	COPPER SHINING 52	CRYSTAL SHINING 07	NATURAL GOLD 51	WHITE PEARL 02
8*			-	3,9x25 3,9x50	38	Ø8	-	12	2	14502039	-	-	●	●	●	●	-	●	●	●
7*			-	3,9x25 3,9x50	38	Ø8	-	12	2	14502040	-	-	●	●	●	●	-	●	●	●
8/135			35-45	3,9x50	38	Ø8	-	12	2	14502041	-	-	●	●	●	●	-	●	●	●
8/135			35-45	3,9x25 3,9x50	38	Ø8	-	12	2	14502038	-	-	●	●	●	●	-	●	●	●
7/135			35-45	3,9x25 3,9x50	38	Ø8	-	12	2	14502005	-	-	●	●	●	●	-	●	●	●
8/135			35-65	3,9x25	38	Ø8	-	12	2	14502042	-	-	●	●	●	●	-	●	●	●
7/135			35-65	3,9x25	38	Ø8	-	12	2	14502043	-	-	●	●	●	●	-	●	●	●
8/135			35-45	3,9x50	38	Ø8	-	12	2	14502049	-	-	●	●	●	●	-	●	●	●
8/135			35-45	3,9x25 3,9x50	38	Ø8	-	12	2	14502051	-	-	●	●	●	●	-	●	●	●
7/135			35-45	3,9x25 3,9x50	38	Ø8	-	12	2	14502008	-	-	●	●	●	●	-	●	●	●
8/135			35-45	3,9x25	38	-	-	12	2	14502046	-	-	●	●	●	●	-	●	●	●
7/135			35-45	3,9x25	38	-	-	12	2	14502047	-	-	●	●	●	●	-	●	●	●
8/135			35-45	3,9x50	38	Ø8	-	12	2	14502048	-	-	●	●	●	●	-	●	●	●
8/160			60-90	3,9x25 3,9x75 3,9x95	38	Ø8	-	12	2	14502052	-	-	●	●	●	●	-	●	●	●
8/135			35-45	3,9x25 3,9x50	38	Ø8	-	12	2	14502050	-	-	●	●	●	●	-	●	●	●
8/160			60-90	3,9x25 3,9x75 3,9x95	38	Ø8	-	12	2	14502053	-	-	●	●	●	●	-	●	●	●
7/135			35-45	3,9x25 3,9x50	38	Ø8	-	12	2	14502015	-	-	●	●	●	●	-	●	●	●
7/160			60-90	3,9x25 3,9x75 3,9x95	38	Ø8	-	12	2	14502054	-	-	●	●	●	●	-	●	●	●
8/135			35-65	3,9x25	38	Ø8	-	12	2	14502044	-	-	●	●	●	●	-	●	●	●
8/160			60-90	3,9x25	38	Ø8	-	12	2	14502055	-	-	●	●	●	●	-	●	●	●
7/135			35-65	3,9x25	38	Ø8	-	12	2	14502045	-	-	●	●	●	●	-	●	●	●
7/160			60-90	3,9x25	38	Ø8	-	12	2	14502056	-	-	●	●	●	●	-	●	●	●
(8)/135			35-45	3,9x50	38	Ø8	-	4	6	05112122	-	-	●	●	●	●	-	●	●	●

Descrizione_Description DODO_design Ufficio Tecnico Opentech

ZAMAK

Supporto_Support ø52x10mm

■	+										PLATINUM ABACO* 62	BLACK PEARL ABACO* 50	PLATINUM 03	BLACK PEARL 04	COPPER PEARL 5B	NOIR PEARL 08	COPPER SHINING 52	CRYSTAL SHINING 07	NATURAL GOLD 51	WHITE PEARL 02
(8)/135			35-45	3,9x25 3,9x50	38	Ø8	-	4	6	05112110	-	-	●	●	●	●	-	●	●	●
(7)/135			35-45	3,9x25 3,9x50	38	Ø8	-	4	6	05112111	-	-	●	●	●	●	-	●	●	●
(6)/135			35-45	3,9x25 3,9x50	38	Ø8	-	4	6	05112112	-	-	●	●	●	●	-	●	●	●
(5)/135			35-45	3,9x25 3,9x50	38	Ø8	-	4	6	05112254	-	-	●	●	●	●	-	●	●	●
(4)/135			35-45	3,9x25 3,9x50	38	Ø8	-	4	6	05112113	-	-	●	●	●	●	-	●	●	●
8/135			35-45	3,9x25 3,9x50	38	Ø8	-	12	1	19402005	-	-	●	●	●	●	-	●	●	●
7/135			35-45	3,9x25 3,9x50	38	Ø8	-	12	1	19402006	-	-	●	●	●	●	-	●	●	●
8/155			50-55	3,9x25 3,9x70	38	Ø8	-	12	1	19402007	-	-	●	●	●	●	-	●	●	●
7/155			50-55	3,9x25 3,9x70	38	Ø8	-	12	1	19402008	-	-	●	●	●	●	-	●	●	●
8/165			60-75	3,9x25 3,9x65 3,9x75 3,9x95	38	Ø8	-	12	1	19402009	-	-	●	●	●	●	-	●	●	●
7/165			60-75	3,9x25 3,9x65 3,9x75 3,9x95	38	Ø8	-	12	1	19402010	-	-	●	●	●	●	-	●	●	●
8/175			75-90	3,9x25 3,9x65 3,9x75 3,9x95	38	Ø8	-	12	1	19402011	-	-	●	●	●	●	-	●	●	●
7/175			75-90	3,9x25 3,9x65 3,9x75 3,9x95	38	Ø8	-	12	1	19402012	-	-	●	●	●	●	-	●	●	●

Descrizione_Description **1/2 ferro ancora**_1/2 anchor spindle

STEEL

Supporto_Support -

■	+										MECHANISM 26
8/60		-	-	-	-	-	-	10	8	06727462	●
8/70		-	-	-	-	-	-	10	8	06727427	●
8/80		-	-	-	-	-	-	10	8	06727428	●
8/90		-	-	-	-	-	-	10	8	06727429	●
8/100		-	-	-	-	-	-	10	8	06727463	●
7/60		-	-	-	-	-	-	10	8	06727432	●
7/70		-	-	-	-	-	-	10	8	06727433	●
7/80		-	-	-	-	-	-	10	8	06727434	●
7/90		-	-	-	-	-	-	10	8	06727435	●
7/100		-	-	-	-	-	-	10	8	06727436	●

Descrizione_Description: **LOFT/ROUND** pomolo fisso_fixed knob

ZAMAK

Supporto_Support: ø52x10mm

											PLATINUM ABACO® 62	BLACK PEARL ABACO® 50	PLATINUM PVD 03	BLACK PEARL PVD 04	COPPER PEARL PVD 5B	NOIR PEARL PVD 08	COPPER SHINING PVD 52	CRYSTAL SHINING PVD 07	NATURAL GOLD PVD 51	WHITE PEARL PVD 02
7* or 8*	CLAG		-	3,9x25 3,9x50	38	Ø8	-	12	1	17002001	-	-	●	●	●	●	-	●	●	●
7* or 8*	CLAG		-	3,9x25 3,9x50	38	Ø8	-	12	1	19602001	-	-	●	●	●	●	-	●	●	●

Descrizione_Description: **1/2 ferro per pomolo fisso**_1/2 fixed knob spindle

STEEL

Supporto_Support: -

											MECHANISM 26
7/90	CLAG	-	45-55	-	-	-	-	10	8	06727507	●
7/100	CLAG	-	50-65	-	-	-	-	10	8	06727508	●
7/110	CLAG	-	60-75	-	-	-	-	10	8	06727509	●
7/120	CLAG	-	70-85	-	-	-	-	10	8	06727510	●
7/130	CLAG	-	80-95	-	-	-	-	10	8	06727551	●
7/140	CLAG	-	90-105	-	-	-	-	10	8	06727552	●
8/90	CLAG	-	45-55	-	-	-	-	10	8	06727503	●
8/100	CLAG	-	50-65	-	-	-	-	10	8	06727504	●
8/110	CLAG	-	60-75	-	-	-	-	10	8	06727505	●
8/120	CLAG	-	70-85	-	-	-	-	10	8	06727506	●
8/130	CLAG	-	80-95	-	-	-	-	10	8	06727549	●
8/140	CLAG	-	90-105	-	-	-	-	10	8	06727550	●

DODO

design Ufficio Tecnico Opentech

CE

BRASS | **ZAMAK** | ALU | AISI 316 | AISI 304

MANIGLIA PER PORTE INTERNE – SUPPORTO ø45X8mm_INTERNAL DOORS HANDLE – SUPPORT ø45X8mm

CARATTERISTICHE_FEATURES	FISSAGGIO_FIXING	FINITURE_FINISHES	OPZIONI_OPTIONS
CLAG		1.000h, 304 500h, 316 500h, 500h, 500h, PVD 500h, 500h	EN-179, REI-60, IP-65

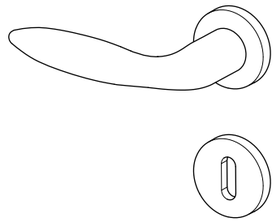

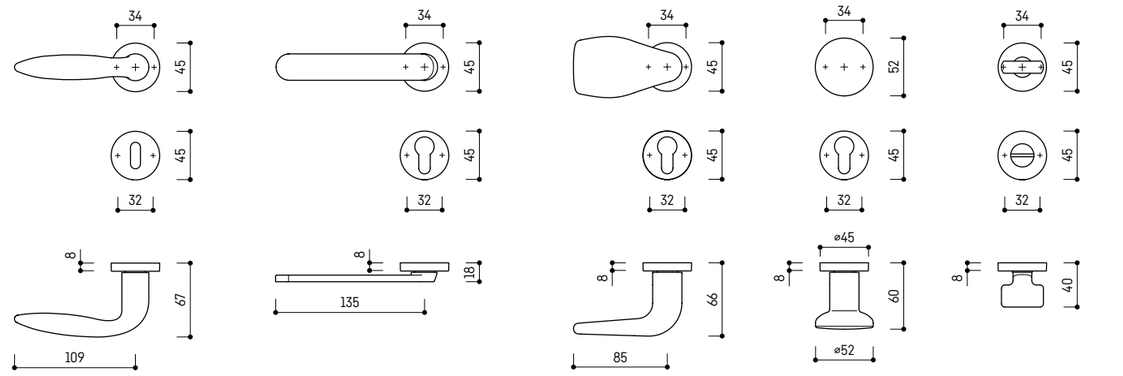

STANDARD | REDUCED | LOFT KNOB (FIXED) | ROUND KNOB (FIXED) | TOILET SET

VERSIONI DISPONIBILI_AVAILABLE VERSIONS

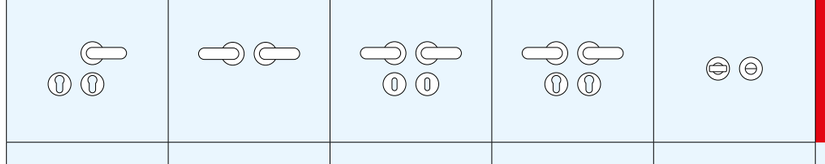

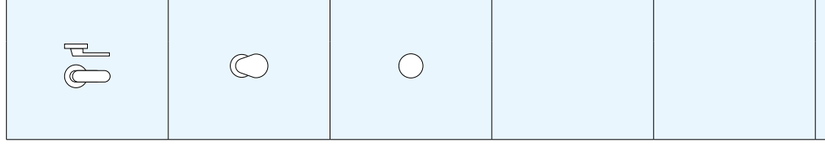

CAPITOLATO_SPECIFICATION

ULTRACYCLE®

ULTRACYCLE® tested for over **1.000.000** cycles - **CLASS 4**

NORMA DIN EN 1906_DIN EN 1906 NORM

4 7 - 0 0 4 0 A

Per una descrizione dettagliata di tutte le specifiche tecniche presenti nel prodotto, da impiegare nei capitolati o nelle offerte pubbliche, fate riferimento alla sezione CAPITOLATI_for a detailed description of all the technical informations contained in the product, to be used in the specifications or in public tenders, please refer to the SPECIFICATIONS section.

Descrizione_Description **DODO**_design Ufficio Tecnico Opentech

ZAMAK

Supporto_Support **ø45X8mm**

	■	+										PLATINUM ABACO® 62	BLACK PEARL ABACO® 50	PLATINUM PVD 03	BLACK PEARL PVD 04	COPPER PEARL PVD 5B	NOIR PEARL PVD 08	COPPER SHINING PVD 52	CRYSTAL SHINING PVD 07	NATURAL GOLD PVD 51	WHITE PEARL PVD 02
	8*	CLIAD		-	3,9x25	34/32	-	-	12	2	14577001	-	-	●	●	●	●	-	●	●	●
	7*	CLIAD		-	3,9x25	34/32	-	-	12	2	14577002	-	-	●	●	●	●	-	●	●	●
	8/135	CLIAD		35-45	3,9x25	34	-	-	12	2	14577003	-	-	●	●	●	●	-	●	●	●
	7/135	CLIAD		35-45	3,9x25	34	-	-	12	2	14577004	-	-	●	●	●	●	-	●	●	●
	8/135	CLIAD		35-45	3,9x25	34/32	-	-	12	2	14577007	-	-	●	●	●	●	-	●	●	●
	7/135	CLIAD		35-45	3,9x25	34/32	-	-	12	2	14577008	-	-	●	●	●	●	-	●	●	●
	8/135	CLIAD		35-65	3,9x25	34/32	-	-	12	2	14577005	-	-	●	●	●	●	-	●	●	●
	7/135	CLIAD		35-65	3,9x25	34/32	-	-	12	2	14577006	-	-	●	●	●	●	-	●	●	●
	8/160	CLIAD		60-90	3,9x25	34/32	-	-	12	2	14577009	-	-	●	●	●	●	-	●	●	●
	7/160	CLIAD		60-90	3,9x25	34/32	-	-	12	2	14577010	-	-	●	●	●	●	-	●	●	●
	(8)/135	-		35-45	3,9x25	34/32	-	-	4	6	05112197	-	-	●	●	●	●	-	●	●	●
	(7)/135	-		35-45	3,9x25	34/32	-	-	4	6	05112198	-	-	●	●	●	●	-	●	●	●
	(6)/135	-		35-45	3,9x25	34/32	-	-	4	6	05112199	-	-	●	●	●	●	-	●	●	●
	(5)/135	-		35-45	3,9x25	34/32	-	-	4	6	05112257	-	-	●	●	●	●	-	●	●	●
	(4)/135	-		35-45	3,9x25	34/32	-	-	4	6	05112200	-	-	●	●	●	●	-	●	●	●
	8/135	CLIAD		35-45	3,9x25	34	-	-	12	1	19477001	-	-	●	●	●	●	-	●	●	●
	7/135	CLIAD		35-45	3,9x25	34	-	-	12	1	19477002	-	-	●	●	●	●	-	●	●	●
	8/155	CLIAD		50-55	3,9x25	34	-	-	12	1	19477003	-	-	●	●	●	●	-	●	●	●
	7/155	CLIAD		50-55	3,9x25	34	-	-	12	1	19477004	-	-	●	●	●	●	-	●	●	●
	8/165	CLIAD		60-75	3,9x25	34	-	-	12	1	19477005	-	-	●	●	●	●	-	●	●	●
	7/165	CLIAD		60-75	3,9x25	34	-	-	12	1	19477006	-	-	●	●	●	●	-	●	●	●
	8/175	CLIAD		75-90	3,9x25	34	-	-	12	1	19477007	-	-	●	●	●	●	-	●	●	●
	7/175	CLIAD		75-90	3,9x25	34	-	-	12	1	19477008	-	-	●	●	●	●	-	●	●	●

Descrizione_Description **1/2 ferro ancora**_1/2 anchor spindle

STEEL

Supporto_Support -

	■	+										MECHANISM 26
	8/60	CLIAD CC	-	-	-	-	-	-	10	8	06727462	●
	8/70	CLIAD CC	-	-	-	-	-	-	10	8	06727427	●
	8/80	CLIAD CC	-	-	-	-	-	-	10	8	06727428	●
	8/90	CLIAD CC	-	-	-	-	-	-	10	8	06727429	●
	8/100	CLIAD CC	-	-	-	-	-	-	10	8	06727463	●
	7/60	CLIAD CC	-	-	-	-	-	-	10	8	06727432	●
	7/70	CLIAD CC	-	-	-	-	-	-	10	8	06727433	●
	7/80	CLIAD CC	-	-	-	-	-	-	10	8	06727434	●
	7/90	CLIAD CC	-	-	-	-	-	-	10	8	06727435	●
	7/100	CLIAD CC	-	-	-	-	-	-	10	8	06727436	●

Descrizione_Description **LOFT/ROUND** pomolo fisso_fixed knob

ZAMAK

Supporto_Support **ø45X8mm**

	■	+										PLATINUM ABACO® 62	BLACK PEARL ABACO® 50	PLATINUM PVD 03	BLACK PEARL PVD 04	COPPER PEARL PVD 5B	NOIR PEARL PVD 08	COPPER SHINING PVD 52	CRYSTAL SHINING PVD 07	NATURAL GOLD PVD 51	WHITE PEARL PVD 02
	7* or 8*	CLIAD		-	3,9x25	34	-	-	12	1	17077001	-	-	●	●	●	●	-	●	●	●
	7* or 8*	CLIAD		-	3,9x25	34	-	-	12	1	19677001	-	-	●	●	●	●	-	●	●	●

Descrizione_Description **1/2 ferro per pomolo fisso**_1/2 fixed knob spindle

STEEL

Supporto_Support -

	■	+										MECHANISM 26
	7/90	CLIAD CC	-	45-55	-	-	-	-	10	8	06727507	●
	7/100	CLIAD CC	-	50-65	-	-	-	-	10	8	06727508	●
	7/110	CLIAD CC	-	60-75	-	-	-	-	10	8	06727509	●
	7/120	CLIAD CC	-	70-85	-	-	-	-	10	8	06727510	●
	7/130	CLIAD CC	-	80-95	-	-	-	-	10	8	06727551	●
	7/140	CLIAD CC	-	90-105	-	-	-	-	10	8	06727552	●
	8/90	CLIAD CC	-	45-55	-	-	-	-	10	8	06727503	●
	8/100	CLIAD CC	-	50-65	-	-	-	-	10	8	06727504	●
	8/110	CLIAD CC	-	60-75	-	-	-	-	10	8	06727505	●
	8/120	CLIAD CC	-	70-85	-	-	-	-	10	8	06727506	●
	8/130	CLIAD CC	-	80-95	-	-	-	-	10	8	06727549	●
	8/140	CLIAD CC	-	90-105	-	-	-	-	10	8	06727550	●

DODO

design Ufficio Tecnico Opentech

CE

BRASS | **ZAMAK** | ALU | AISI 316 | AISI 304

MANIGLIA PER PORTE INTERNE – SUPPORTO MINIMAL ø25x2mm_INTERNAL DOORS HANDLE – SUPPORT MINIMAL ø25x2mm

CARATTERISTICHE_FEATURES	**FISSAGGIO**_FIXING	**FINITURE**_FINISHES	**OPZIONI**_OPTIONS
CLAQ		1.000h · 304 500h · 316 500h · 500h · 500h · PVD 500h · 500h	EN-179

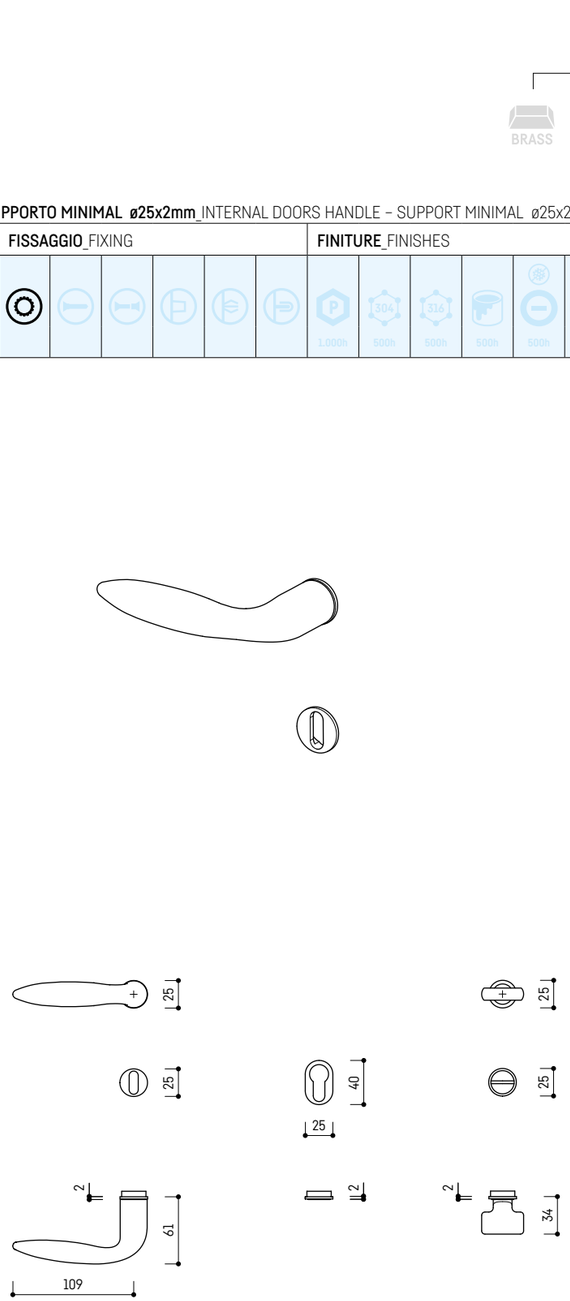

STANDARD TOILET SET

VERSIONI DISPONIBILI_AVAILABLE VERSIONS

CAPITOLATO_SPECIFICATION

ULTRACYCLE®

ULTRACYCLE® tested for over **1.000.000** cycles - **CLASS 4**

NORMA DIN EN 1906_DIN EN 1906 NORM

4 | 7 | - | 0 | 0 | 4 | 0 | A

Per una descrizione dettagliata di tutte le specifiche tecniche presenti nel prodotto, da impiegare nei capitolati o nelle offerte pubbliche, fate riferimento alla sezione CAPITOLATI_for a detailed description of all the technical informations contained in the product, to be used in the specifications or in public tenders, please refer to the SPECIFICATIONS section.

Descrizione_Description: **DODO**_design Ufficio Tecnico Opentech

ZAMAK

Supporto_Support: **MINIMAL ø25x2mm**

■	+										PLATINUM ABACO® 62	BLACK PEARL ABACO® 50	PLATINUM 03	BLACK PEARL 04	COPPER PEARL 5B	NOIR PEARL 08	COPPER SHINING 52	CRYSTAL SHINING 07	NATURAL GOLD 51	WHITE PEARL 02
8/135	CLAQ	◎	35-45	-	-	ø20	-	12	2	14546001	-	-	●	●	●	●	-	●	●	●
7/135	CLAQ	◎	35-45	-	-	ø20	-	12	2	14546002	-	-	●	●	●	●	-	●	●	●
-	CLAQ	◎	-	-	-	ø20	-	24	10	06548093	-	-	●	●	●	●	-	●	●	●
-	-	◎	-	-	-	ø20	-	24	10	06525146	-	-	●	●	●	●	-	●	●	●
-	-	◎	-	-	-	-	-	24	10	06525145	-	-	●	●	●	●	-	●	●	●
(8)/135	-	◎	35-45	-	-	ø20	-	4	6	05112233	-	-	●	●	●	●	-	●	●	●
(7)/135	-	◎	35-45	-	-	ø20	-	4	6	05112234	-	-	●	●	●	●	-	●	●	●
(6)/135	-	◎	35-45	-	-	ø20	-	4	6	05112235	-	-	●	●	●	●	-	●	●	●
(5)/135	-	◎	35-45	-	-	ø20	-	4	6	05112259	-	-	●	●	●	●	-	●	●	●
(4)/135	-	◎	35-45	-	-	ø20	-	4	6	05112260	-	-	●	●	●	●	-	●	●	●

DODO

design Ufficio Tecnico Opentech

BRASS | **ZAMAK** | ALU | AISI 316 | AISI 304

MANIGLIA PER PORTE INTERNE – SUPPORTO EASYPIN ø55x2mm_INTERNAL DOORS HANDLE – SUPPORT EASYPIN ø55x2mm

CARATTERISTICHE_FEATURES	FISSAGGIO_FIXING	FINITURE_FINISHES	OPZIONI_OPTIONS
CLAQ		1.000h, 304 500h, 316 500h, 500h, 500h, PVD 500h, 500h	EN-179, REI-60, IP-65

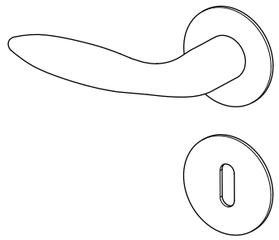

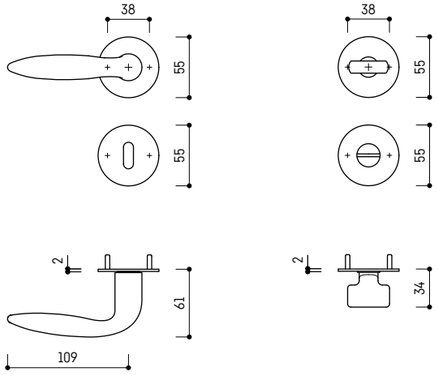

STANDARD

TOILET SET

VERSIONI DISPONIBILI_AVAILABLE VERSIONS

CAPITOLATO_SPECIFICATION

ULTRACYCLE®

ULTRACYCLE® tested for over **1.000.000** cycles - **CLASS 4**

NORMA DIN EN 1906_DIN EN 1906 NORM

4 | 7 | - | 0 | 0 | 4 | 0 | A

Per una descrizione dettagliata di tutte le specifiche tecniche presenti nel prodotto, da impiegare nei capitolati o nelle offerte pubbliche, fate riferimento alla sezione CAPITOLATI_for a detailed description of all the technical informations contained in the product, to be used in the specifications or in public tenders, please refer to the SPECIFICATIONS section.

Descrizione_Description: **DODO**_design Ufficio Tecnico Opentech

ZAMAK

Supporto_Support: **EASYPIN ø55x2mm**

											PLATINUM ABACO® 62	BLACK PEARL ABACO® 50	PLATINUM PVD 03	BLACK PEARL PVD 04	COPPER PEARL PVD 5B	NOIR PEARL PVD 08	COPPER SHINING PVD 52	CRYSTAL SHINING PVD 07	NATURAL GOLD PVD 51	WHITE PEARL PVD 02
8/135	CLAQ		35-45	-	38	Ø7	-	12	2	14559001	-	-	●	●	●	●	-	●	●	●
7/135	CLAQ		35-45	-	38	Ø7	-	12	2	14559002	-	-	●	●	●	●	-	●	●	●
-	CLAQ		-	-	38	Ø7	-	24	10	06548077	-	-	●	●	●	●	-	●	●	●
-	-		-	-	38	Ø7	-	24	10	06525121	-	-	●	●	●	●	-	●	●	●
-	-		-	-	38	Ø7	-	24	10	06525120	-	-	●	●	●	●	-	●	●	●
(8)/135	-		35-45	-	38	Ø7	-	4	6	05112251	-	-	●	●	●	●	-	●	●	●
(7)/135	-		35-45	-	38	Ø7	-	4	6	05112261	-	-	●	●	●	●	-	●	●	●
(6)/135	-		35-45	-	38	Ø7	-	4	6	05112262	-	-	●	●	●	●	-	●	●	●
(5)/135	-		35-45	-	38	Ø7	-	4	6	05112263	-	-	●	●	●	●	-	●	●	●
(4)/135	-		35-45	-	38	Ø7	-	4	6	05112264	-	-	●	●	●	●	-	●	●	●

DODO

design Ufficio Tecnico Opentech

BRASS | **ZAMAK** | ALU | AISI 316

MANIGLIA PER PORTE INTERNE – SUPPORTO 40x235x9mm_INTERNAL DOORS HANDLE – SUPPORT 40x235x9mm

CARATTERISTICHE_FEATURES	**FISSAGGIO**_FIXING	**FINITURE**_FINISHES	**OPZIONI**_OPTIONS
CLAQ		1.000h · 304 500h · 316 500h · 500h · 500h · **PVD 500h** · **500h**	**EN-179** · REI-60 · IP-65

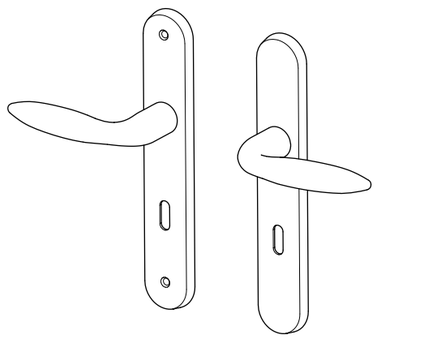

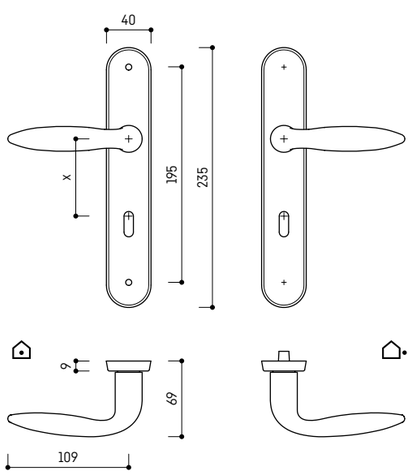

VERSIONI DISPONIBILI_AVAILABLE VERSIONS

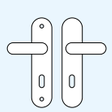
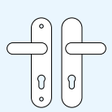
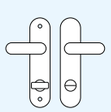

CAPITOLATO_SPECIFICATION

ULTRACYCLE®

ULTRACYCLE® tested for over **1.000.000** cycles - **CLASS 4**

NORMA DIN EN 1906_DIN EN 1906 NORM

4 | 7 | - | 0 | 0 | 4 | 0 | A

Per una descrizione dettagliata di tutte le specifiche tecniche presenti nel prodotto, da impiegare nei capitolati o nelle offerte pubbliche, fate riferimento alla sezione CAPITOLATI_for a detailed description of all the technical informations contained in the product, to be used in the specifications or in public tenders, please refer to the SPECIFICATIONS section.

Descrizione_Description: **DODO**_design Ufficio Tecnico Opentech

Supporto_Support: ZAMAK 40x235x9mm

AISI 304

												PLATINUM ABACO® 62	BLACK PEARL ABACO® 50	PLATINUM 03	BLACK PEARL 04	COPPER PEARL 5B	NOIR PEARL 08	COPPER SHINING 52	CRYSTAL SHINING 07	NATURAL GOLD 51	WHITE PEARL 02
	■	+			X																
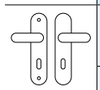	8/135	CLAQ		35-55	M4x75 SEC	195	Ø10	72	12	2	14501035	-	-	●	●	●	●	-	●	●	●
	7/135	CLAQ		35-55	M4x75 SEC	195	Ø10	70	12	2	14501037	-	-	●	●	●	●	-	●	●	●
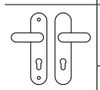	8/135	CLAQ		35-55	M4x75 SEC	195	Ø10	72	12	2	14501034	-	-	●	●	●	●	-	●	●	●
	7/135	CLAQ		35-55	M4x75 SEC	195	Ø10	70	12	2	14501005	-	-	●	●	●	●	-	●	●	●
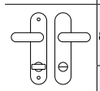	8(8)/135	CLAQ		35-55	M4x75 SEC	195	Ø10	78	12	2	14501036	-	-	●	●	●	●	-	●	●	●
	7(6)/135	CLAQ		35-55	M4x75 SEC	195	Ø10	70	12	2	14501038	-	-	●	●	●	●	-	●	●	●

GEO

design Ufficio Tecnico Opentech

BRASS | **ZAMAK** | ALU | AISI 316 | AISI 304

MANIGLIA PER PORTE INTERNE – SUPPORTO ø52x10mm INTERNAL DOORS HANDLE – SUPPORT ø52x10mm

CARATTERISTICHE FEATURES	**FISSAGGIO** FIXING	**FINITURE** FINISHES	**OPZIONI** OPTIONS
CLAQ · R · molla · 4÷8	○ · ⊖ · ⊖ · ⊖ · ⊖ · ⊖	1.000h · 304 500h · 316 500h · 500h · 500h · PVD 500h · 500h	EN-179 · REI-60 · IP-65

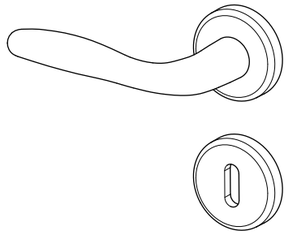

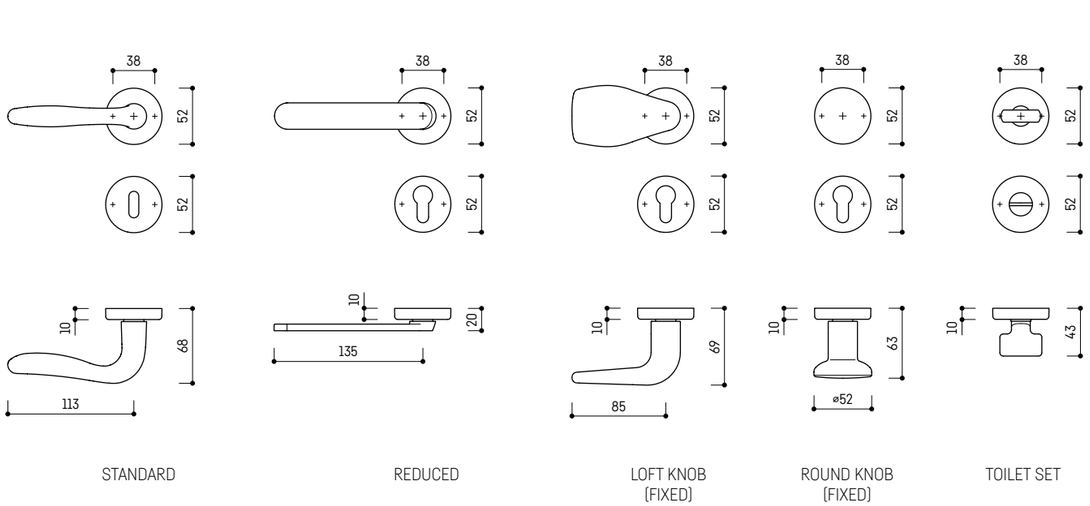

STANDARD | REDUCED | LOFT KNOB (FIXED) | ROUND KNOB (FIXED) | TOILET SET

VERSIONI DISPONIBILI AVAILABLE VERSIONS

CAPITOLATO SPECIFICATION

ULTRACYCLE®

ULTRACYCLE® tested for over **1.000.000** cycles - **CLASS 4**

NORMA DIN EN 1906 DIN EN 1906 NORM

4 | 7 | - | 0 | 0 | 4 | 0 | A

Per una descrizione dettagliata di tutte le specifiche tecniche presenti nel prodotto, da impiegare nei capitolati o nelle offerte pubbliche, fate riferimento alla sezione CAPITOLATI for a detailed description of all the technical informations contained in the product, to be used in the specifications or in public tenders, please refer to the SPECIFICATIONS section.

Descrizione Description: **GEO** design Ufficio Tecnico Opentech

ZAMAK

Supporto Support: **ø52x10mm**

■	+			X							PLATINUM ABACO* 62	BLACK PEARL ABACO* 50	PLATINUM 03	BLACK PEARL 04	COPPER PEARL 5B	NOIR PEARL 08	COPPER SHINING 52	CRYSTAL SHINING 07	NATURAL GOLD 51	WHITE PEARL 02
8*	CLAQ		-	3,9x25 3,9x50	38	Ø8	-	12	2	15402005	-	-	●	●	●	●	-	●	●	●
7*	CLAQ		-	3,9x25 3,9x50	38	Ø8	-	12	2	15402006	-	-	●	●	●	●	-	●	●	●
8/135	CLAQ		35-45	3,9x50	38	Ø8	-	12	2	15402007	-	-	●	●	●	●	-	●	●	●
8/135	CLAQ		35-45	3,9x25 3,9x50	38	Ø8	-	12	2	15402004	-	-	●	●	●	●	-	●	●	●
7/135	CLAQ		35-45	3,9x25 3,9x50	38	Ø8	-	12	2	15402008	-	-	●	●	●	●	-	●	●	●
8/135	CLAQ		35-65	3,9x25	38	Ø8	-	12	2	15402009	-	-	●	●	●	●	-	●	●	●
7/135	CLAQ		35-65	3,9x25	38	Ø8	-	12	2	15402010	-	-	●	●	●	●	-	●	●	●
8/135	CLAQ		35-45	3,9x50	38	Ø8	-	12	2	15402012	-	-	●	●	●	●	-	●	●	●
8/135	CLAQ		35-45	3,9x25 3,9x50	38	Ø8	-	12	2	15402015	-	-	●	●	●	●	-	●	●	●
7/135	CLAQ		35-45	3,9x25 3,9x50	38	Ø8	-	12	2	15402016	-	-	●	●	●	●	-	●	●	●
8/135	CLAQ		35-45	3,9x25	38	-	-	12	2	15402019	-	-	●	●	●	●	-	●	●	●
7/135	CLAQ		35-45	3,9x25	38	-	-	12	2	15402020	-	-	●	●	●	●	-	●	●	●
8/135	CLAQ		35-45	3,9x50	38	Ø8	-	12	2	15402011	-	-	●	●	●	●	-	●	●	●
8/160	CLAQ		60-90	3,9x25 3,9x75 3,9x95	38	Ø8	-	12	2	15402021	-	-	●	●	●	●	-	●	●	●
8/135	CLAQ		35-45	3,9x25 3,9x50	38	Ø8	-	12	2	15402013	-	-	●	●	●	●	-	●	●	●
8/160	CLAQ		60-90	3,9x25 3,9x75 3,9x95	38	Ø8	-	12	2	15402022	-	-	●	●	●	●	-	●	●	●
7/135	CLAQ		35-45	3,9x25 3,9x50	38	Ø8	-	12	2	15402014	-	-	●	●	●	●	-	●	●	●
7/160	CLAQ		60-90	3,9x25 3,9x75 3,9x95	38	Ø8	-	12	2	15402023	-	-	●	●	●	●	-	●	●	●
8/135	CLAQ		35-65	3,9x25	38	Ø8	-	12	2	15402017	-	-	●	●	●	●	-	●	●	●
8/160	CLAQ		60-90	3,9x25	38	Ø8	-	12	2	15402024	-	-	●	●	●	●	-	●	●	●
7/135	CLAQ		35-65	3,9x25	38	Ø8	-	12	2	15402018	-	-	●	●	●	●	-	●	●	●
7/160	CLAQ		60-90	3,9x25	38	Ø8	-	12	2	15402025	-	-	●	●	●	●	-	●	●	●
(8)/135			35-45	3,9x50	38	Ø8	-	4	6	05112122	-	-	●	●	●	●	-	●	●	●

Descrizione_Description **GEO**_design Ufficio Tecnico Opentech

Supporto_Support **ZAMAK**

ø52x10mm

												PLATINUM ABACO* 62	BLACK PEARL ABACO* 50	PLATINUM 03	BLACK PEARL 04	COPPER PEARL 5B	NOIR PEARL 08	COPPER SHINING 52	CRYSTAL SHINING 07	NATURAL GOLD 51	WHITE PEARL 02
	(8)/135			35-45	3,9x25 3,9x50	38	Ø8	-	4	6	05112110	-	-	●	●	●	●	-	●	●	●
	(7)/135			35-45	3,9x25 3,9x50	38	Ø8	-	4	6	05112111	-	-	●	●	●	●	-	●	●	●
	(6)/135			35-45	3,9x25 3,9x50	38	Ø8	-	4	6	05112112	-	-	●	●	●	●	-	●	●	●
	(5)/135			35-45	3,9x25 3,9x50	38	Ø8	-	4	6	05112254	-	-	●	●	●	●	-	●	●	●
	(4)/135			35-45	3,9x25 3,9x50	38	Ø8	-	4	6	05112113	-	-	●	●	●	●	-	●	●	●
	8/135	GLAS		35-45	3,9x25 3,9x50	38	Ø8	-	12	1	19402005	-	-	●	●	●	●	-	●	●	●
	7/135	GLAS		35-45	3,9x25 3,9x50	38	Ø8	-	12	1	19402006	-	-	●	●	●	●	-	●	●	●
	8/155	GLAS		50-55	3,9x25 3,9x70	38	Ø8	-	12	1	19402007	-	-	●	●	●	●	-	●	●	●
	7/155	GLAS		50-55	3,9x25 3,9x70	38	Ø8	-	12	1	19402008	-	-	●	●	●	●	-	●	●	●
	8/165	GLAS		60-75	3,9x25 3,9x65 3,9x75 3,9x95	38	Ø8	-	12	1	19402009	-	-	●	●	●	●	-	●	●	●
	7/165	GLAS		60-75	3,9x25 3,9x65 3,9x75 3,9x95	38	Ø8	-	12	1	19402010	-	-	●	●	●	●	-	●	●	●
	8/175	GLAS		75-90	3,9x25 3,9x65 3,9x75 3,9x95	38	Ø8	-	12	1	19402011	-	-	●	●	●	●	-	●	●	●
	7/175	GLAS		75-90	3,9x25 3,9x65 3,9x75 3,9x95	38	Ø8	-	12	1	19402012	-	-	●	●	●	●	-	●	●	●

Descrizione_Description **1/2 ferro ancora**_1/2 anchor spindle

Supporto_Support **STEEL**

-

											MECHANISM 26
	8/60	GLAS CO	-	-	-	-	-	-	10	8	06727462	●
	8/70	GLAS CO	-	-	-	-	-	-	10	8	06727427	●
	8/80	GLAS CO	-	-	-	-	-	-	10	8	06727428	●
	8/90	GLAS CO	-	-	-	-	-	-	10	8	06727429	●
	8/100	GLAS CO	-	-	-	-	-	-	10	8	06727463	●
	7/60	GLAS CO	-	-	-	-	-	-	10	8	06727432	●
	7/70	GLAS CO	-	-	-	-	-	-	10	8	06727433	●
	7/80	GLAS CO	-	-	-	-	-	-	10	8	06727434	●
	7/90	GLAS CO	-	-	-	-	-	-	10	8	06727435	●
	7/100	GLAS CO	-	-	-	-	-	-	10	8	06727436	●

Descrizione_Description **LOFT/ROUND** pomolo fisso_fixed knob

Supporto_Support **ZAMAK**

ø52x10mm

												PLATINUM ABACO* 62	BLACK PEARL ABACO* 50	PLATINUM 03	BLACK PEARL 04	COPPER PEARL 5B	NOIR PEARL 08	COPPER SHINING 52	CRYSTAL SHINING 07	NATURAL GOLD 51	WHITE PEARL 02
	7* or 8*	GLAS		-	3,9x25 3,9x50	38	Ø8	-	12	1	17002001	-	-	●	●	●	●	-	●	●	●
	7* or 8*	GLAS		-	3,9x25 3,9x50	38	Ø8	-	12	1	19602001	-	-	●	●	●	●	-	●	●	●

Descrizione_Description **1/2 ferro per pomolo fisso**_1/2 fixed knob spindle

Supporto_Support **STEEL**

-

											MECHANISM 26
	7/90	GLAS CO	-	45-55	-	-	-	-	10	8	06727507	●
	7/100	GLAS CO	-	50-65	-	-	-	-	10	8	06727508	●
	7/110	GLAS CO	-	60-75	-	-	-	-	10	8	06727509	●
	7/120	GLAS CO	-	70-85	-	-	-	-	10	8	06727510	●
	7/130	GLAS CO	-	80-95	-	-	-	-	10	8	06727551	●
	7/140	GLAS CO	-	90-105	-	-	-	-	10	8	06727552	●
	8/90	GLAS CO	-	45-55	-	-	-	-	10	8	06727503	●
	8/100	GLAS CO	-	50-65	-	-	-	-	10	8	06727504	●
	8/110	GLAS CO	-	60-75	-	-	-	-	10	8	06727505	●
	8/120	GLAS CO	-	70-85	-	-	-	-	10	8	06727506	●
	8/130	GLAS CO	-	80-95	-	-	-	-	10	8	06727549	●
	8/140	GLAS CO	-	90-105	-	-	-	-	10	8	06727550	●

GEO

design Ufficio Tecnico Opentech

BRASS | **ZAMAK** | ALU | AISI 316 | AISI 304

MANIGLIA PER PORTE INTERNE – SUPPORTO ø45X8mm_INTERNAL DOORS HANDLE – SUPPORT ø45X8mm

CARATTERISTICHE_FEATURES	**FISSAGGIO**_FIXING	**FINITURE**_FINISHES	**OPZIONI**_OPTIONS
CLAQ		1.000h · 304 500h · 316 500h · 500h · 500h · PVD 500h · 500h	EN-179

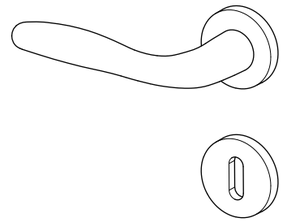

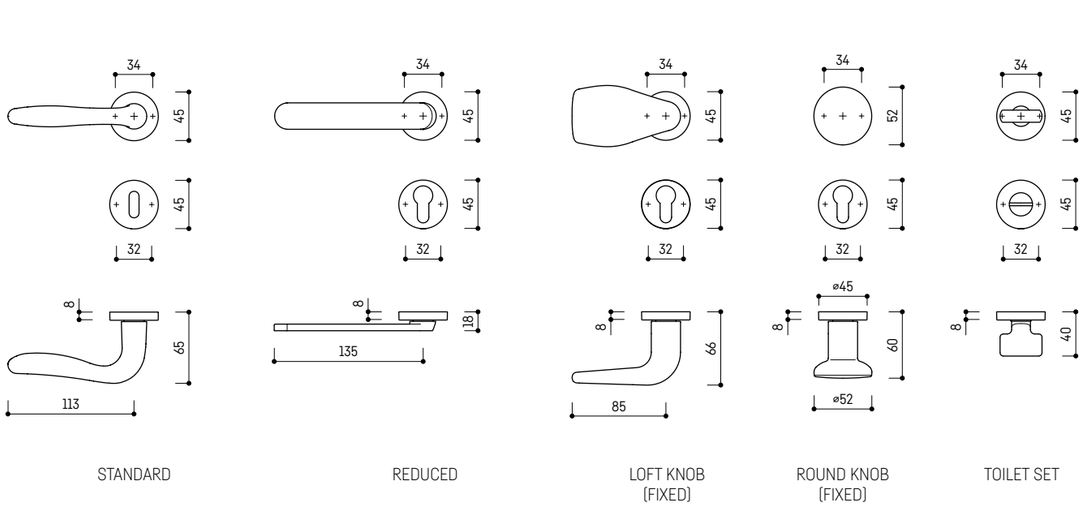

STANDARD | REDUCED | LOFT KNOB (FIXED) | ROUND KNOB (FIXED) | TOILET SET

VERSIONI DISPONIBILI_AVAILABLE VERSIONS

CAPITOLATO_SPECIFICATION

ULTRACYCLE®

ULTRACYCLE® tested for over **1.000.000** cycles - **CLASS 4**

NORMA DIN EN 1906_DIN EN 1906 NORM

4 | 7 | - | 0 | 0 | 4 | 0 | A

Per una descrizione dettagliata di tutte le specifiche tecniche presenti nel prodotto, da impiegare nei capitolati o nelle offerte pubbliche, fate riferimento alla sezione CAPITOLATI_for a detailed description of all the technical informations contained in the product, to be used in the specifications or in public tenders, please refer to the SPECIFICATIONS section.

Descrizione_Description: **GEO**_design Ufficio Tecnico Opentech

Supporto_Support: ZAMAK ø45X8mm

■	+	X	X	X	PLATINUM ABACO* 62	BLACK PEARL ABACO* 50	PLATINUM 03	BLACK PEARL 04	COPPER PEARL 5B	NOIR PEARL 08	COPPER SHINING 52	CRYSTAL SHINING 07	NATURAL GOLD 51	WHITE PEARL 02	
8*	CLAQ	-	3,9x25	34/32	-	-	12	2	15477001	-	-	●	●	●	●	●	-	●	●	●	
7*	CLAQ	-	3,9x25	34/32	-	-	12	2	15477002	-	-	●	●	●	●	●	-	●	●	●	
8/135	CLAQ	35-45	3,9x25	34	-	-	12	2	15477003	-	-	●	●	●	●	●	-	●	●	●	
7/135	CLAQ	35-45	3,9x25	34	-	-	12	2	15477004	-	-	●	●	●	●	●	-	●	●	●	
8/135	CLAQ	35-45	3,9x25	34/32	-	-	12	2	15477007	-	-	●	●	●	●	●	-	●	●	●	
7/135	CLAQ	35-45	3,9x25	34/32	-	-	12	2	15477008	-	-	●	●	●	●	●	-	●	●	●	
8/135	CLAQ	35-65	3,9x25	34/32	-	-	12	2	15477005	-	-	●	●	●	●	●	-	●	●	●	
7/135	CLAQ	35-65	3,9x25	34/32	-	-	12	2	15477006	-	-	●	●	●	●	●	-	●	●	●	
8/160	CLAQ	60-90	3,9x25	34/32	-	-	12	2	15477009	-	-	●	●	●	●	●	-	●	●	●	
7/160	CLAQ	60-90	3,9x25	34/32	-	-	12	2	15477010	-	-	●	●	●	●	●	-	●	●	●	
(8)/135	-	35-45	3,9x25	34/32	-	-	4	6	05112197	-	-	●	●	●	●	●	-	●	●	●	
(7)/135	-	35-45	3,9x25	34/32	-	-	4	6	05112198	-	-	●	●	●	●	●	-	●	●	●	
(6)/135	-	35-45	3,9x25	34/32	-	-	4	6	05112199	-	-	●	●	●	●	●	-	●	●	●	
(5)/135	-	35-45	3,9x25	34/32	-	-	4	6	05112257	-	-	●	●	●	●	●	-	●	●	●	
(4)/135	-	35-45	3,9x25	34/32	-	-	4	6	05112200	-	-	●	●	●	●	●	-	●	●	●	
8/135	CLAQ	35-45	3,9x25	34	-	-	12	1	19477001	-	-	●	●	●	●	●	-	●	●	●	
7/135	CLAQ	35-45	3,9x25	34	-	-	12	1	19477002	-	-	●	●	●	●	●	-	●	●	●	
8/155	CLAQ	50-55	3,9x25	34	-	-	12	1	19477003	-	-	●	●	●	●	●	-	●	●	●	
7/155	CLAQ	50-55	3,9x25	34	-	-	12	1	19477004	-	-	●	●	●	●	●	-	●	●	●	
8/165	CLAQ	60-75	3,9x25	34	-	-	12	1	19477005	-	-	●	●	●	●	●	-	●	●	●	
7/165	CLAQ	60-75	3,9x25	34	-	-	12	1	19477006	-	-	●	●	●	●	●	-	●	●	●	
8/175	CLAQ	75-90	3,9x25	34	-	-	12	1	19477007	-	-	●	●	●	●	●	-	●	●	●	
7/175	CLAQ	75-90	3,9x25	34	-	-	12	1	19477008	-	-	●	●	●	●	●	-	●	●	●	

Descrizione_Description **1/2 ferro ancora**_1/2 anchor spindle

STEEL

Supporto_Support -

												MECHANISM 26
8/60	CLAQ CE	-	-	-	-	-	-	10	8	06727462		●
8/70	CLAQ CE	-	-	-	-	-	-	10	8	06727427		●
8/80	CLAQ CE	-	-	-	-	-	-	10	8	06727428		●
8/90	CLAQ CE	-	-	-	-	-	-	10	8	06727429		●
8/100	CLAQ CE	-	-	-	-	-	-	10	8	06727463		●
7/60	CLAQ CE	-	-	-	-	-	-	10	8	06727432		●
7/70	CLAQ CE	-	-	-	-	-	-	10	8	06727433		●
7/80	CLAQ CE	-	-	-	-	-	-	10	8	06727434		●
7/90	CLAQ CE	-	-	-	-	-	-	10	8	06727435		●
7/100	CLAQ CE	-	-	-	-	-	-	10	8	06727436		●

Descrizione_Description **LOFT/ROUND** pomolo fisso_fixed knob

ZAMAK

Supporto_Support **ø45X8mm**

											PLATINUM ABACO® 62	BLACK PEARL ABACO® 50	PLATINUM 03	BLACK PEARL 04	COPPER PEARL 5B	NOIR PEARL 08	COPPER SHINING 52	CRYSTAL SHINING 07	NATURAL GOLD 51	WHITE PEARL 02
7" or 8"	CLAQ	-	-	3,9x25	34	-	-	12	1	17077001	-	-	●	●	●	●	-	●	●	●
7" or 8"	CLAQ	-	-	3,9x25	34	-	-	12	1	19677001	-	-	●	●	●	●	-	●	●	●

Descrizione_Description **1/2 ferro per pomolo fisso**_1/2 fixed knob spindle

STEEL

Supporto_Support -

											MECHANISM 26
7/90	CLAQ CE	-	45-55	-	-	-	-	10	8	06727507	●
7/100	CLAQ CE	-	50-65	-	-	-	-	10	8	06727508	●
7/110	CLAQ CE	-	60-75	-	-	-	-	10	8	06727509	●
7/120	CLAQ CE	-	70-85	-	-	-	-	10	8	06727510	●
7/130	CLAQ CE	-	80-95	-	-	-	-	10	8	06727551	●
7/140	CLAQ CE	-	90-105	-	-	-	-	10	8	06727552	●
8/90	CLAQ CE	-	45-55	-	-	-	-	10	8	06727503	●
8/100	CLAQ CE	-	50-65	-	-	-	-	10	8	06727504	●
8/110	CLAQ CE	-	60-75	-	-	-	-	10	8	06727505	●
8/120	CLAQ CE	-	70-85	-	-	-	-	10	8	06727506	●
8/130	CLAQ CE	-	80-95	-	-	-	-	10	8	06727549	●
8/140	CLAQ CE	-	90-105	-	-	-	-	10	8	06727550	●

GEO

design Ufficio Tecnico Opentech

CE

BRASS **ZAMAK** ALU AISI 316 AISI 304

MANIGLIA PER PORTE INTERNE – SUPPORTO MINIMAL ø25x2mm_INTERNAL DOORS HANDLE – SUPPORT MINIMAL ø25x2mm

CARATTERISTICHE_FEATURES	**FISSAGGIO**_FIXING	**FINITURE**_FINISHES	**OPZIONI**_OPTIONS
CLAQ		1.000h 500h 500h 500h 500h PVD 500h 500h	EN-179 REI-60 IP-65

STANDARD TOILET SET

VERSIONI DISPONIBILI_AVAILABLE VERSIONS	**CAPITOLATO**_SPECIFICATION
	ULTRACYCLE® tested for over **1.000.000** cycles - **CLASS 4** **NORMA DIN EN 1906**_DIN EN 1906 NORM 4 7 - 0 0 4 0 A
	Per una descrizione dettagliata di tutte le specifiche tecniche presenti nel prodotto, da impiegare nei capitolati o nelle offerte pubbliche, fate riferimento alla sezione CAPITOLATI_for a detailed description of all the technical informations contained in the product, to be used in the specifications or in public tenders, please refer to the SPECIFICATIONS section.

Descrizione_Description | GEO_design Ufficio Tecnico Opentech

ZAMAK

Supporto_Support | MINIMAL ø25x2mm

												PLATINUM ABACO® 62	BLACK PEARL ABACO® 50	PLATINUM PVD 03	BLACK PEARL PVD 04	COPPER PEARL PVD 5B	NOIR PEARL PVD 08	COPPER SHINING PVD 52	CRYSTAL SHINING PVD 07	NATURAL GOLD PVD 51	WHITE PEARL PVD 02
	8/135	CLAQ		35-45	-	-	ø20	-	12	2	15446001	-	-	●	●	●	●	-	●	●	●
	7/135	CLAQ		35-45	-	-	ø20	-	12	2	15446002	-	-	●	●	●	●	-	●	●	●
	-	CLAQ		-	-	-	ø20	-	24	10	06548093	-	-	●	●	●	●	-	●	●	●
	-	-		-	-	-	ø20	-	24	10	06525146	-	-	●	●	●	●	-	●	●	●
	-	-		-	-	-	-	-	24	10	06525145	-	-	●	●	●	●	-	●	●	●
	(8)/135	-		35-45	-	-	ø20	-	4	6	05112233	-	-	●	●	●	●	-	●	●	●
	(7)/135	-		35-45	-	-	ø20	-	4	6	05112234	-	-	●	●	●	●	-	●	●	●
	(6)/135	-		35-45	-	-	ø20	-	4	6	05112235	-	-	●	●	●	●	-	●	●	●
	(5)/135	-		35-45	-	-	ø20	-	4	6	05112259	-	-	●	●	●	●	-	●	●	●
	(4)/135	-		35-45	-	-	ø20	-	4	6	05112260	-	-	●	●	●	●	-	●	●	●

GEO

design Ufficio Tecnico Opentech

CE

BRASS | ZAMAK | ALU | AISI 316 | AISI 304

MANIGLIA PER PORTE INTERNE – SUPPORTO EASYPIN ø55x2mm_INTERNAL DOORS HANDLE – SUPPORT EASYPIN ø55x2mm

CARATTERISTICHE_FEATURES					FISSAGGIO_FIXING						FINITURE_FINISHES							OPZIONI_OPTIONS			
CQ	CLAQ	R									P 1.000h	304 500h	316 500h	500h	500h	PVD 500h	500h		EN-179	REI-60	IP-65

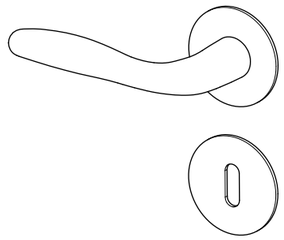

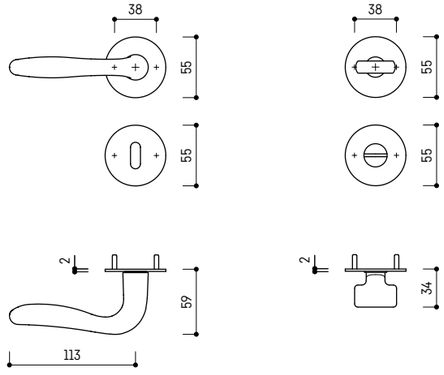

STANDARD

TOILET SET

VERSIONI DISPONIBILI_AVAILABLE VERSIONS

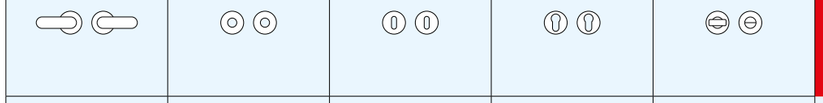

CAPITOLATO_SPECIFICATION

ULTRACYCLE®

ULTRACYCLE® tested for over **1.000.000** cycles - **CLASS 4**

NORMA DIN EN 1906_DIN EN 1906 NORM

4 7 - 0 0 4 0 A

Per una descrizione dettagliata di tutte le specifiche tecniche presenti nel prodotto, da impiegare nei capitolati o nelle offerte pubbliche, fate riferimento alla sezione CAPITOLATI_for a detailed description of all the technical informations contained in the product, to be used in the specifications or in public tenders, please refer to the SPECIFICATIONS section.

Descrizione_Description | **GEO**_design Ufficio Tecnico Opentech

ZAMAK

Supporto_Support | **EASYPIN ø55x2mm**

	■	+										PLATINUM ABACO* 62	BLACK PEARL ABACO* 50	PLATINUM 03	BLACK PEARL 04	COPPER PEARL 5B	NOIR PEARL 08	COPPER SHINING 52	CRYSTAL SHINING 07	NATURAL GOLD 51	WHITE PEARL 02
	8/135	CLAC		35-45	-	38	Ø7	-	12	2	15459001	-	-	●	●	●	●	-	●	●	●
	7/135	CLAC		35-45	-	38	Ø7	-	12	2	15459002	-	-	●	●	●	●	-	●	●	●
	-	CLAC		-	-	38	Ø7	-	24	10	06548077	-	-	●	●	●	●	-	●	●	●
	-	-		-	-	38	Ø7	-	24	10	06525121	-	-	●	●	●	●	-	●	●	●
	-	-		-	-	38	Ø7	-	24	10	06525120	-	-	●	●	●	●	-	●	●	●
	(8)/135	-		35-45	-	38	Ø7	-	4	6	05112251	-	-	●	●	●	●	-	●	●	●
	(7)/135	-		35-45	-	38	Ø7	-	4	6	05112261	-	-	●	●	●	●	-	●	●	●
	(6)/135	-		35-45	-	38	Ø7	-	4	6	05112262	-	-	●	●	●	●	-	●	●	●
	(5)/135	-		35-45	-	38	Ø7	-	4	6	05112263	-	-	●	●	●	●	-	●	●	●
	(4)/135	-		35-45	-	38	Ø7	-	4	6	05112264	-	-	●	●	●	●	-	●	●	●

GEO

design Ufficio Tecnico Opentech

CE

BRASS | **ZAMAK** | ALU | AISI 316 | AISI 304

MANIGLIA PER PORTE INTERNE – SUPPORTO 40x235x9mm_INTERNAL DOORS HANDLE – SUPPORT 40x235x9mm

CARATTERISTICHE_FEATURES	**FISSAGGIO**_FIXING	**FINITURE**_FINISHES	**OPZIONI**_OPTIONS
CLAC		1.000h · 500h · 500h · 500h · 500h · PVD 500h · 500h	EN-179

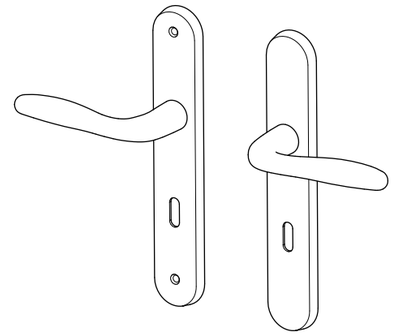

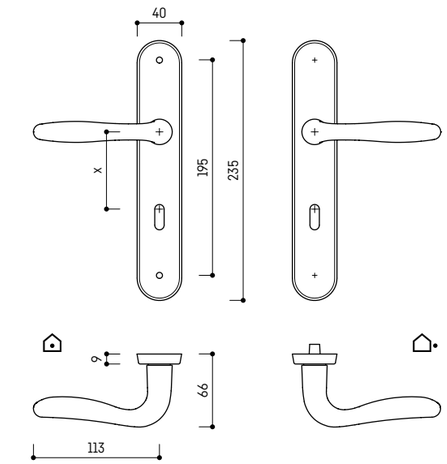

VERSIONI DISPONIBILI_AVAILABLE VERSIONS

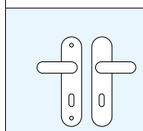
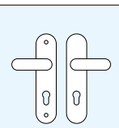
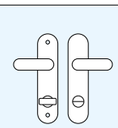

CAPITOLATO_SPECIFICATION

ULTRACYCLE®

ULTRACYCLE® tested for over **1.000.000** cycles - **CLASS 4**

NORMA DIN EN 1906_DIN EN 1906 NORM

4 | 7 | - | 0 | 0 | 4 | 0 | A

Per una descrizione dettagliata di tutte le specifiche tecniche presenti nel prodotto, da impiegare nei capitolati o nelle offerte pubbliche, fate riferimento alla sezione CAPITOLATI_for a detailed description of all the technical informations contained in the product, to be used in the specifications or in public tenders, please refer to the SPECIFICATIONS section.

Descrizione_Description | **GEO**_design Ufficio Tecnico Opentech

ZAMAK

Supporto_Support | **40x235x9mm**

												PLATINUM ABACO* 62	BLACK PEARL ABACO* 50	PLATINUM PVD 03	BLACK PEARL PVD 04	COPPER PEARL PVD 5B	NOIR PEARL PVD 08	COPPER SHINING PVD 52	CRYSTAL SHINING PVD 07	NATURAL GOLD PVD 51	WHITE PEARL PVD 02
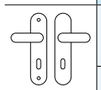	8/135		35-55	M4x75 SEC	195	Ø10	72	12	2	15401002	-	-	●	●	●	●	-	●	●	●
	7/135		35-55	M4x75 SEC	195	Ø10	70	12	2	15401005	-	-	●	●	●	●	-	●	●	●
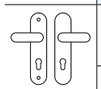	8/135		35-55	M4x75 SEC	195	Ø10	72	12	2	15401001	-	-	●	●	●	●	-	●	●	●
	7/135		35-55	M4x75 SEC	195	Ø10	70	12	2	15401004	-	-	●	●	●	●	-	●	●	●
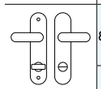	8(8)/135		35-55	M4x75 SEC	195	Ø10	78	12	2	15401003	-	-	●	●	●	●	-	●	●	●
	7(6)/135		35-55	M4x75 SEC	195	Ø10	70	12	2	15401006	-	-	●	●	●	●	-	●	●	●

SIRIUS

design Ufficio Tecnico Opentech

BRASS | **ZAMAK** | ALU | AISI 316 | AISI 304

MANIGLIA PER PORTE INTERNE – SUPPORTO ø52x10mm_INTERNAL DOORS HANDLE – SUPPORT ø52x10mm

CARATTERISTICHE_FEATURES	**FISSAGGIO**_FIXING	**FINITURE**_FINISHES								**OPZIONI**_OPTIONS			
		1.000h	304 500h	316 500h	500h	500h	PVD 500h	500h		EN-179	REI-60	IP-65

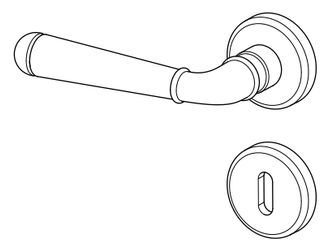

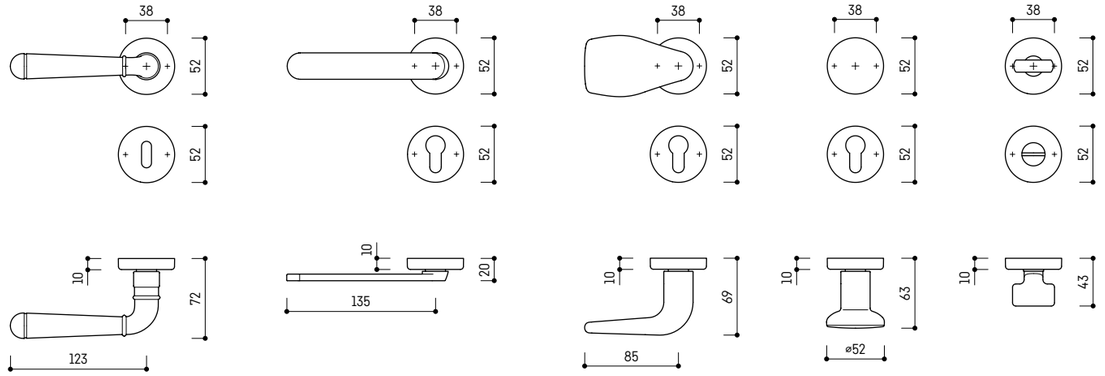

STANDARD | REDUCED | LOFT KNOB (FIXED) | ROUND KNOB (FIXED) | TOILET SET

VERSIONI DISPONIBILI_AVAILABLE VERSIONS

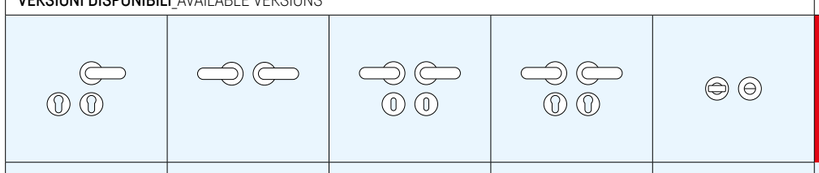

CAPITOLATO_SPECIFICATION

ULTRACYCLE®

ULTRACYCLE® tested for over **1.000.000** cycles - **CLASS 4**

NORMA DIN EN 1906_DIN EN 1906 NORM

4 | 7 | - | 0 | 0 | 4 | 0 | A

Per una descrizione dettagliata di tutte le specifiche tecniche presenti nel prodotto, da impiegare nei capitolati o nelle offerte pubbliche, fate riferimento alla sezione CAPITOLATI_for a detailed description of all the technical informations contained in the product, to be used in the specifications or in public tenders, please refer to the SPECIFICATIONS section.

Descrizione_Description **SIRIUS**_design Ufficio Tecnico Opentech

ZAMAK

Supporto_Support **ø52x10mm**

■	+			X							PLATINUM ABACO* 62	BLACK PEARL ABACO* 50	PLATINUM 03	BLACK PEARL 04	COPPER PEARL 5B	NOIR PEARL 08	COPPER SHINING 52	CRYSTAL SHINING 07	NATURAL GOLD 51	WHITE PEARL 02
8*			-	3,9x25 3,9x50	38	Ø8	-	12	2	13702040	-	-	●	●	●	●	-	●	●	●
7*			-	3,9x25 3,9x50	38	Ø8	-	12	2	13702041	-	-	●	●	●	●	-	●	●	●
8/135			35-45	3,9x50	38	Ø8	-	12	2	13702042	-	-	●	●	●	●	-	●	●	●
8/135			35-45	3,9x25 3,9x50	38	Ø8	-	12	2	13702039	-	-	●	●	●	●	-	●	●	●
7/135			35-45	3,9x25 3,9x50	38	Ø8	-	12	2	13702001	-	-	●	●	●	●	-	●	●	●
8/135			35-65	3,9x25	38	Ø8	-	12	2	13702043	-	-	●	●	●	●	-	●	●	●
7/135			35-65	3,9x25	38	Ø8	-	12	2	13702044	-	-	●	●	●	●	-	●	●	●
8/135			35-45	3,9x50	38	Ø8	-	12	2	13702046	-	-	●	●	●	●	-	●	●	●
8/135			35-45	3,9x25 3,9x50	38	Ø8	-	12	2	13702048	-	-	●	●	●	●	-	●	●	●
7/135			35-45	3,9x25 3,9x50	38	Ø8	-	12	2	13702005	-	-	●	●	●	●	-	●	●	●
8/135			35-45	3,9x25	38	-	-	12	2	13702051	-	-	●	●	●	●	-	●	●	●
7/135			35-45	3,9x25	38	-	-	12	2	13702052	-	-	●	●	●	●	-	●	●	●
8/135			35-45	3,9x50	38	Ø8	-	12	2	13702045	-	-	●	●	●	●	-	●	●	●
8/160			60-90	3,9x25 3,9x75 3,9x95	38	Ø8	-	12	2	13702053	-	-	●	●	●	●	-	●	●	●
8/135			35-45	3,9x25 3,9x50	38	Ø8	-	12	2	13702047	-	-	●	●	●	●	-	●	●	●
8/160			60-90	3,9x25 3,9x75 3,9x95	38	Ø8	-	12	2	13702054	-	-	●	●	●	●	-	●	●	●
7/135			35-45	3,9x25 3,9x50	38	Ø8	-	12	2	13702013	-	-	●	●	●	●	-	●	●	●
7/160			60-90	3,9x25 3,9x75 3,9x95	38	Ø8	-	12	2	13702055	-	-	●	●	●	●	-	●	●	●
8/135			35-65	3,9x25	38	Ø8	-	12	2	13702049	-	-	●	●	●	●	-	●	●	●
8/160			60-90	3,9x25	38	Ø8	-	12	2	13702056	-	-	●	●	●	●	-	●	●	●
7/135			35-65	3,9x25	38	Ø8	-	12	2	13702050	-	-	●	●	●	●	-	●	●	●
7/160			60-90	3,9x25	38	Ø8	-	12	2	13702057	-	-	●	●	●	●	-	●	●	●
(8)/135			35-45	3,9x50	38	Ø8	-	4	6	05112122	-	-	●	●	●	●	-	●	●	●

Descrizione_Description **SIRIUS**_design Ufficio Tecnico Opentech

ZAMAK

Supporto_Support **ø52x10mm**

■	+			X							PLATINUM ABACO* 62	BLACK PEARL ABACO* 50	PLATINUM 03	BLACK PEARL 04	COPPER PEARL 5B	NOIR PEARL 08	COPPER SHINING 52	CRYSTAL SHINING 07	NATURAL GOLD 51	WHITE PEARL 02
(8)/135			35-45	3,9x25 3,9x50	38	Ø8	-	4	6	05112110	-	-	●	●	●	●	-	●	●	●
(7)/135			35-45	3,9x25 3,9x50	38	Ø8	-	4	6	05112111	-	-	●	●	●	●	-	●	●	●
(6)/135			35-45	3,9x25 3,9x50	38	Ø8	-	4	6	05112112	-	-	●	●	●	●	-	●	●	●
(5)/135			35-45	3,9x25 3,9x50	38	Ø8	-	4	6	05112254	-	-	●	●	●	●	-	●	●	●
(4)/135			35-45	3,9x25 3,9x50	38	Ø8	-	4	6	05112113	-	-	●	●	●	●	-	●	●	●
8/135			35-45	3,9x25 3,9x50	38	Ø8	-	12	1	19402005	-	-	●	●	●	●	-	●	●	●
7/135			35-45	3,9x25 3,9x50	38	Ø8	-	12	1	19402006	-	-	●	●	●	●	-	●	●	●
8/155			50-55	3,9x25 3,9x70	38	Ø8	-	12	1	19402007	-	-	●	●	●	●	-	●	●	●
7/155			50-55	3,9x25 3,9x70	38	Ø8	-	12	1	19402008	-	-	●	●	●	●	-	●	●	●
8/165			60-75	3,9x25 3,9x65 3,9x75 3,9x95	38	Ø8	-	12	1	19402009	-	-	●	●	●	●	-	●	●	●
7/165			60-75	3,9x25 3,9x65 3,9x75 3,9x95	38	Ø8	-	12	1	19402010	-	-	●	●	●	●	-	●	●	●
8/175			75-90	3,9x25 3,9x65 3,9x75 3,9x95	38	Ø8	-	12	1	19402011	-	-	●	●	●	●	-	●	●	●
7/175			75-90	3,9x25 3,9x65 3,9x75 3,9x95	38	Ø8	-	12	1	19402012	-	-	●	●	●	●	-	●	●	●

Descrizione_Description **1/2 ferro ancora**_1/2 anchor spindle

STEEL

Supporto_Support -

■	+			X							MECHANISM 26
8/60		-	-	-	-	-	-	10	8	06727462	●
8/70		-	-	-	-	-	-	10	8	06727427	●
8/80		-	-	-	-	-	-	10	8	06727428	●
8/90		-	-	-	-	-	-	10	8	06727429	●
8/100		-	-	-	-	-	-	10	8	06727463	●
7/60		-	-	-	-	-	-	10	8	06727432	●
7/70		-	-	-	-	-	-	10	8	06727433	●
7/80		-	-	-	-	-	-	10	8	06727434	●
7/90		-	-	-	-	-	-	10	8	06727435	●
7/100		-	-	-	-	-	-	10	8	06727436	●

Descrizione_Description — **LOFT/ROUND** pomolo fisso_fixed knob

ZAMAK

Supporto_Support — **ø52x10mm**

												PLATINUM ABACO* 62	BLACK PEARL ABACO* 50	PLATINUM 03	BLACK PEARL 04	COPPER PEARL 5B	NOIR PEARL 08	COPPER SHINING 52	CRYSTAL SHINING 07	NATURAL GOLD 51	WHITE PEARL 02
	7* or 8*			-	3,9x25 3,9x50	38	Ø8	-	12	1	17002001	-	-	●	●	●	●	-	●	●	●
	7* or 8*			-	3,9x25 3,9x50	38	Ø8	-	12	1	19602001	-	-	●	●	●	●	-	●	●	●

Descrizione_Description — **1/2 ferro per pomolo fisso**_1/2 fixed knob spindle

STEEL

Supporto_Support — -

											MECHANISM 26
	7/90	-	45-55	-	-	-	-	10	8	06727507	●
	7/100	-	50-65	-	-	-	-	10	8	06727508	●
	7/110	-	60-75	-	-	-	-	10	8	06727509	●
	7/120	-	70-85	-	-	-	-	10	8	06727510	●
	7/130	-	80-95	-	-	-	-	10	8	06727551	●
	7/140	-	90-105	-	-	-	-	10	8	06727552	●
	8/90	-	45-55	-	-	-	-	10	8	06727503	●
	8/100	-	50-65	-	-	-	-	10	8	06727504	●
	8/110	-	60-75	-	-	-	-	10	8	06727505	●
	8/120	-	70-85	-	-	-	-	10	8	06727506	●
	8/130	-	80-95	-	-	-	-	10	8	06727549	●
	8/140	-	90-105	-	-	-	-	10	8	06727550	●

SIRIUS

design Ufficio Tecnico Opentech

CE

BRASS · **ZAMAK** · ALU · AISI 316 · AISI 304

MANIGLIA PER PORTE INTERNE – SUPPORTO ø45X8mm_INTERNAL DOORS HANDLE – SUPPORT ø45X8mm

CARATTERISTICHE_FEATURES	**FISSAGGIO**_FIXING	**FINITURE**_FINISHES										**OPZIONI**_OPTIONS			
		1.000h	304 500h	316 500h	500h	500h	PVD 500h	500h							
		P											EN-179	REI-60	IP-65

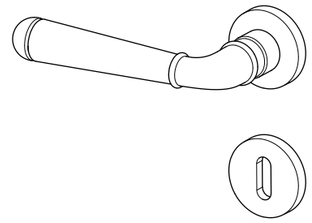

STANDARD · REDUCED · LOFT KNOB (FIXED) · ROUND KNOB (FIXED) · TOILET SET

VERSIONI DISPONIBILI_AVAILABLE VERSIONS

CAPITOLATO_SPECIFICATION

ULTRACYCLE®

ULTRACYCLE® tested for over **1.000.000** cycles - **CLASS 4**

NORMA DIN EN 1906_DIN EN 1906 NORM

4 | 7 | - | 0 | 0 | 4 | 0 | A

Per una descrizione dettagliata di tutte le specifiche tecniche presenti nel prodotto, da impiegare nei capitolati o nelle offerte pubbliche, fate riferimento alla sezione CAPITOLATI_for a detailed description of all the technical informations contained in the product, to be used in the specifications or in public tenders, please refer to the SPECIFICATIONS section.

Descrizione_Description

SIRIUS_design Ufficio Tecnico Opentech

ZAMAK

ø45X8mm

Supporto_Support

| | | |

SIRIUS

design Ufficio Tecnico Opentech

CE

BRASS | **ZAMAK** | ALU | AISI 316 | AISI 304

MANIGLIA PER PORTE INTERNE – SUPPORTO MINIMAL ø25x2mm_INTERNAL DOORS HANDLE – SUPPORT MINIMAL ø25x2mm

CARATTERISTICHE_FEATURES	**FISSAGGIO**_FIXING	**FINITURE**_FINISHES	**OPZIONI**_OPTIONS
CLAQ		1.000h, 304 500h, 316 500h, 500h, 500h, PVD 500h, 500h	EN-179, REI-60, IP-65

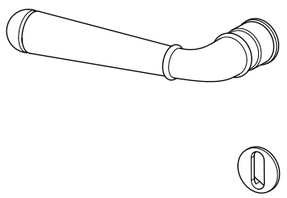

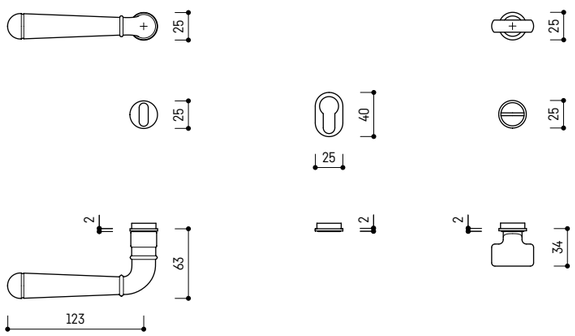

STANDARD

TOILET SET

VERSIONI DISPONIBILI_AVAILABLE VERSIONS

CAPITOLATO_SPECIFICATION

ULTRACYCLE®

ULTRACYCLE® tested for over **1.000.000** cycles - **CLASS 4**

NORMA DIN EN 1906_DIN EN 1906 NORM

4 | 7 | - | 0 | 0 | 4 | 0 | A

Per una descrizione dettagliata di tutte le specifiche tecniche presenti nel prodotto, da impiegare nei capitolati o nelle offerte pubbliche, fate riferimento alla sezione CAPITOLATI_for a detailed description of all the technical informations contained in the product, to be used in the specifications or in public tenders, please refer to the SPECIFICATIONS section.

Descrizione_Description: **SIRIUS**_design Ufficio Tecnico Opentech

ZAMAK

Supporto_Support: **MINIMAL ø25x2mm**

												PLATINUM ABACO® 62	BLACK PEARL ABACO® 50	PLATINUM PVD 03	BLACK PEARL PVD 04	COPPER PEARL PVD 5B	NOIR PEARL PVD 08	COPPER SHINING PVD 52	CRYSTAL SHINING PVD 07	NATURAL GOLD PVD 51	WHITE PEARL PVD 02
	8/135	CLAQ		35-45	-	-	ø20	-	12	2	13746001	-	-	●	●	●	●	-	●	●	●
	7/135	CLAQ		35-45	-	-	ø20	-	12	2	13746002	-	-	●	●	●	●	-	●	●	●
	-	CLAQ		-	-	-	ø20	-	24	10	06548093	-	-	●	●	●	●	-	●	●	●
	-	-		-	-	-	ø20	-	24	10	06525146	-	-	●	●	●	●	-	●	●	●
	-	-		-	-	-	-	-	24	10	06525145	-	-	●	●	●	●	-	●	●	●
	(8)/135	-		35-45	-	-	ø20	-	4	6	05112233	-	-	●	●	●	●	-	●	●	●
	(7)/135	-		35-45	-	-	ø20	-	4	6	05112234	-	-	●	●	●	●	-	●	●	●
	(6)/135	-		35-45	-	-	ø20	-	4	6	05112235	-	-	●	●	●	●	-	●	●	●
	(5)/135	-		35-45	-	-	ø20	-	4	6	05112259	-	-	●	●	●	●	-	●	●	●
	(4)/135	-		35-45	-	-	ø20	-	4	6	05112260	-	-	●	●	●	●	-	●	●	●

SIRIUS

design Ufficio Tecnico Opentech

CE

BRASS · **ZAMAK** · ALU · AISI 316 · AISI 304

MANIGLIA PER PORTE INTERNE – SUPPORTO EASYPIN ø55x2mm INTERNAL DOORS HANDLE – SUPPORT EASYPIN ø55x2mm

CARATTERISTICHE FEATURES	**FISSAGGIO** FIXING	**FINITURE** FINISHES	**OPZIONI** OPTIONS
CLAQ · R		1.000h · 304 500h · 316 500h · 500h · 500h · PVD 500h · 500h	EN-179 · REI-60 · IP-65

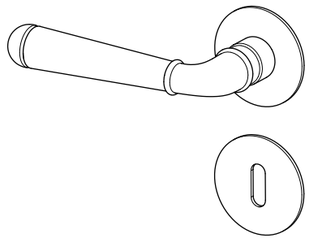

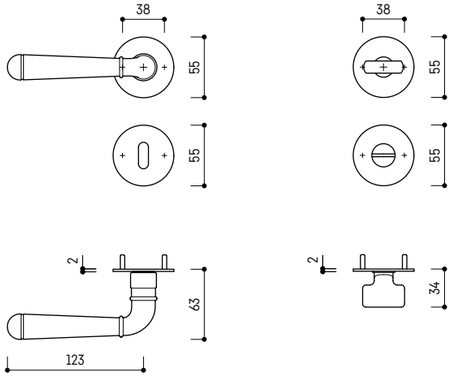

STANDARD TOILET SET

VERSIONI DISPONIBILI AVAILABLE VERSIONS

CAPITOLATO SPECIFICATION

ULTRACYCLE®

ULTRACYCLE® tested for over **1.000.000** cycles - **CLASS 4**

NORMA DIN EN 1906 DIN EN 1906 NORM

4 | 7 | - | 0 | 0 | 4 | 0 | A

Per una descrizione dettagliata di tutte le specifiche tecniche presenti nel prodotto, da impiegare nei capitolati o nelle offerte pubbliche, fate riferimento alla sezione CAPITOLATI for a detailed description of all the technical informations contained in the product, to be used in the specifications or in public tenders, please refer to the SPECIFICATIONS section.

Descrizione Description: **SIRIUS** design Ufficio Tecnico Opentech

Supporto Support: ZAMAK

Supporto Support: EASYPIN ø55x2mm

■	+										PLATINUM ABACO® 62	BLACK PEARL ABACO® 50	PLATINUM 03	BLACK PEARL 04	COPPER PEARL 5B	NOIR PEARL 08	COPPER SHINING 52	CRYSTAL SHINING 07	NATURAL GOLD 51	WHITE PEARL 02
8/135	CLAQ		35-45	-	38	Ø7	-	12	2	13759001	-	-	●	●	●	●	-	●	●	●
7/135	CLAQ		35-45	-	38	Ø7	-	12	2	13759002	-	-	●	●	●	●	-	●	●	●
-	CLAQ		-	-	38	Ø7	-	24	10	06548077	-	-	●	●	●	●	-	●	●	●
-	-		-	-	38	Ø7	-	24	10	06525121	-	-	●	●	●	●	-	●	●	●
-	-		-	-	38	Ø7	-	24	10	06525120	-	-	●	●	●	●	-	●	●	●
(8)/135	-		35-45	-	38	Ø7	-	4	6	05112251	-	-	●	●	●	●	-	●	●	●
(7)/135	-		35-45	-	38	Ø7	-	4	6	05112261	-	-	●	●	●	●	-	●	●	●
(6)/135	-		35-45	-	38	Ø7	-	4	6	05112262	-	-	●	●	●	●	-	●	●	●
(5)/135	-		35-45	-	38	Ø7	-	4	6	05112263	-	-	●	●	●	●	-	●	●	●
(4)/135	-		35-45	-	38	Ø7	-	4	6	05112264	-	-	●	●	●	●	-	●	●	●

SIRIUS

design Ufficio Tecnico Opentech

CE

BRASS | **ZAMAK** | ALU | AISI 316 | AISI 304

MANIGLIA PER PORTE INTERNE – SUPPORTO 40x235x9mm_INTERNAL DOORS HANDLE – SUPPORT 40x235x9mm

CARATTERISTICHE_FEATURES	**FISSAGGIO**_FIXING	**FINITURE**_FINISHES	**OPZIONI**_OPTIONS
CLAQ		1.000h; 304 500h; 316 500h; 500h; 500h; PVD 500h; 500h	EN-179

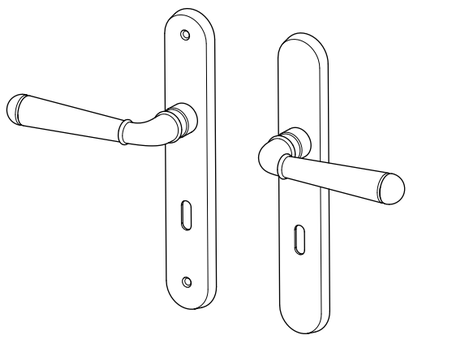

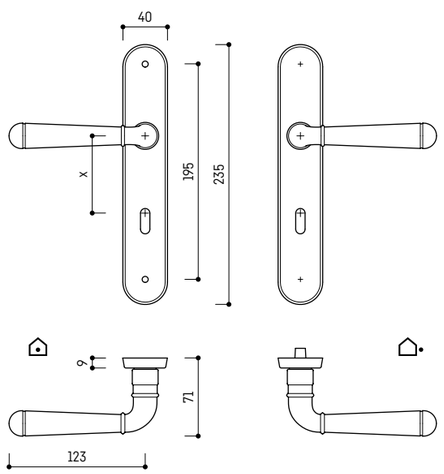

VERSIONI DISPONIBILI_AVAILABLE VERSIONS

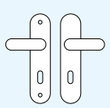
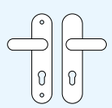
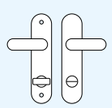

CAPITOLATO_SPECIFICATION

ULTRACYCLE®

ULTRACYCLE® tested for over
1.000.000 cycles - **CLASS 4**

NORMA DIN EN 1906_DIN EN 1906 NORM

4 | 7 | - | 0 | 0 | 4 | 0 | A

Per una descrizione dettagliata di tutte le specifiche tecniche presenti nel prodotto, da impiegare nei capitolati o nelle offerte pubbliche, fate riferimento alla sezione CAPITOLATI_for a detailed description of all the technical informations contained in the product, to be used in the specifications or in public tenders, please refer to the SPECIFICATIONS section.

Descrizione_Description: **SURIUS**_design Ufficio Tecnico Opentech

Supporto_Support: ZAMAK

Supporto_Support: 40x235x9mm

	■	+			X							PLATINUM ABACO® 62	BLACK PEARL ABACO® 50	PLATINUM 03	BLACK PEARL 04	COPPER PEARL 5B	NOIR PEARL 08	COPPER SHINING 52	CRYSTAL SHINING 07	NATURAL GOLD 51	WHITE PEARL 02
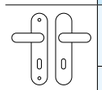	8/135	CLAQ		35-55	M4x75 SEC	195	Ø10	72	12	2	13701056	-	-	●	●	●	●	-	●	●	●
	7/135	CLAQ		35-55	M4x75 SEC	195	Ø10	70	12	2	13701058	-	-	●	●	●	●	-	●	●	●
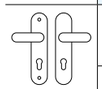	8/135	CLAQ		35-55	M4x75 SEC	195	Ø10	72	12	2	13701055	-	-	●	●	●	●	-	●	●	●
	7/135	CLAQ		35-55	M4x75 SEC	195	Ø10	70	12	2	13701028	-	-	●	●	●	●	-	●	●	●
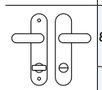	8(8)/135	CLAQ		35-55	M4x75 SEC	195	Ø10	78	12	2	13701057	-	-	●	●	●	●	-	●	●	●
	7(6)/135	CLAQ		35-55	M4x75 SEC	195	Ø10	70	12	2	13701059	-	-	●	●	●	●	-	●	●	●

MIDA

design Leo De Carlo

BRASS · ZAMAK · **ALU** · AISI 316 · AISI 304

MANIGLIA PER PORTE INTERNE – SUPPORTO ø52x10mm_INTERNAL DOORS HANDLE – SUPPORT ø52x10mm

CARATTERISTICHE_FEATURES	**FISSAGGIO**_FIXING	**FINITURE**_FINISHES	**OPZIONI**_OPTIONS
		1.000h · 304 500h · 316 500h · **500h** · **500h** · PVD 500h · 500h	**EN-179** · **REI-60** · **IP-65**

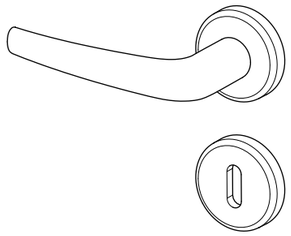

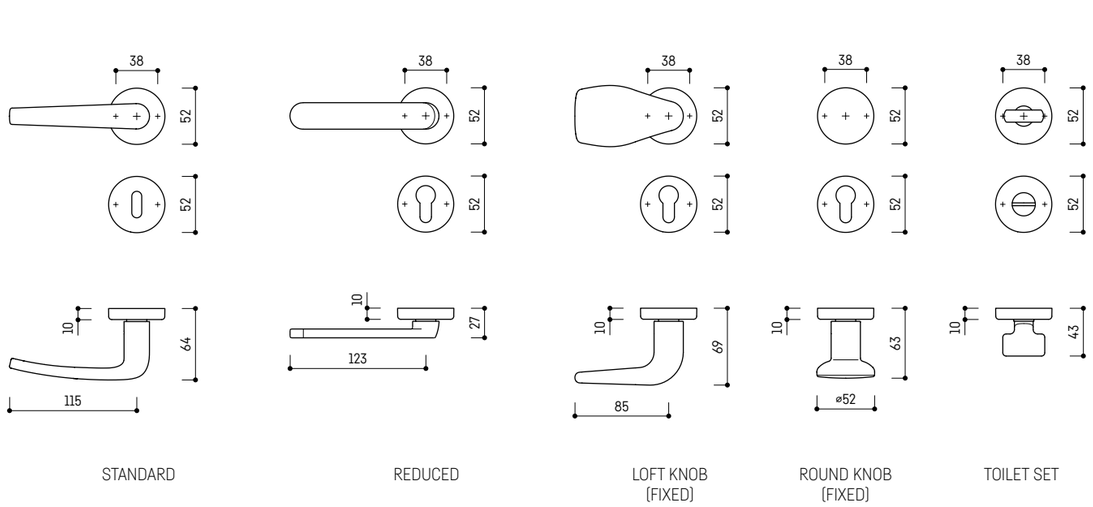

STANDARD · REDUCED · LOFT KNOB (FIXED) · ROUND KNOB (FIXED) · TOILET SET

VERSIONI DISPONIBILI_AVAILABLE VERSIONS

CAPITOLATO_SPECIFICATION

ULTRACYCLE®

ULTRACYCLE® tested for over **1.000.000** cycles - **CLASS 4**

NORMA DIN EN 1906_DIN EN 1906 NORM

4 | 7 | - | 0 | 0 | 4 | 0 | A

Per una descrizione dettagliata di tutte le specifiche tecniche presenti nel prodotto, da impiegare nei capitolati o nelle offerte pubbliche, fate riferimento alla sezione CAPITOLATI_for a detailed description of all the technical informations contained in the product, to be used in the specifications or in public tenders, please refer to the SPECIFICATIONS section.

Descrizione_Description: **MIDA**_design Leo De Carlo

ALU

Supporto_Support: **ø52x10mm**

												F1 97	F9 4B	ENOX 77	BLACK RAL 9005 33	WHITE SIGNAL RAL 9016 22	PURE WHITE RAL 9010 67	WHITE BIO* 88	NOIR BIO* 89	ANTHRACITE RAL 7016 78	LIGHT GREY RAL 7035 82	CLAY BROWN RAL 8003 80	IVORY RAL 1015 81	DARK BROWN RAL 8017 96
	■	+		x	X																			
	8*		-	3,9x50	38	Ø8	-	12	2	16002010	●	●	●	●	●	●	●	●	●	●	-	●	●
	8*		-	3,9x25 3,9x50	38	Ø8	-	12	2	16002001	●	●	●	●	●	●	●	●	●	●	-	●	●
	7*		-	3,9x25 3,9x50	38	Ø8	-	12	2	16002017	●	●	●	●	●	●	●	●	●	●	-	●	●
	8*		-	3,9x25	38	Ø8	-	12	2	16002019	●	●	●	●	●	●	●	●	●	●	-	●	●
	7*		-	3,9x25	38	Ø8	-	12	2	16002048	●	●	●	●	●	●	●	●	●	●	-	●	●
	8/135		35-45	3,9x50	38	Ø8	-	12	2	16002011	●	●	●	●	●	●	●	●	●	●	-	●	●
	8/135		35-45	3,9x25 3,9x50	38	Ø8	-	12	2	16002081	●	●	●	●	●	●	●	●	●	●	-	●	●
	7/135		35-45	3,9x25 3,9x50	38	Ø8	-	12	2	16002031	●	●	●	●	●	●	●	●	●	●	-	●	●
	8/135		35-65	3,9x25 3,9x50	38	Ø8	-	12	2	16002020	●	●	●	●	●	●	●	●	●	●	-	●	●
	7/135		35-65	3,9x25 3,9x50	38	Ø8	-	12	2	16002040	●	●	●	●	●	●	●	●	●	●	-	●	●
	8/135		35-45	3,9x50	38	Ø8	-	12	2	16002013	●	●	●	●	●	●	●	●	●	●	-	●	●
	8/135		35-45	3,9x25 3,9x50	38	Ø8	-	12	2	16002004	●	●	●	●	●	●	●	●	●	●	-	●	●
	7/135		35-45	3,9x25 3,9x50	38	Ø8	-	12	2	16002033	●	●	●	●	●	●	●	●	●	●	-	●	●
	8/135		35-45	3,9x25	38	-	-	12	2	16002021	●	●	●	●	●	●	●	●	●	●	-	●	●
	7/135		35-45	3,9x25	38	-	-	12	2	16002042	●	●	●	●	●	●	●	●	●	●	-	●	●
	8/135		35-45	3,9x50	38	Ø8	-	12	2	16002012	●	●	●	●	●	●	●	●	●	●	-	●	●
	8/135		35-45	3,9x25 3,9x50	38	Ø8	-	12	2	16002003	●	●	●	●	●	●	●	●	●	●	-	●	●
	7/135		35-45	3,9x25 3,9x50	38	Ø8	-	12	2	16002032	●	●	●	●	●	●	●	●	●	●	-	●	●
	8/135	90°	35-45	3,9x25 3,9x50	38	Ø8	-	12	2	16098009	●	●	●	●	●	●	●	●	●	●	-	●	●
	7/135	90°	35-45	3,9x25 3,9x50	38	Ø8	-	12	2	16098010	●	●	●	●	●	●	●	●	●	●	-	●	●
	8/135		35-45	3,9x25	38	-	-	12	2	16002022	●	●	●	●	●	●	●	●	●	●	-	●	●
	7/135		35-45	3,9x25	38	-	-	12	2	16002041	●	●	●	●	●	●	●	●	●	●	-	●	●
	8/135	90°	35-45	3,9x25	38	-	-	12	2	16098011	●	●	●	●	●	●	●	●	●	●	-	●	●

Descrizione_Description MIDA_design Leo De Carlo

ALU

Supporto_Support ø52x10mm

| | | |

Descrizione_Description — **LOFT/ROUND** pomolo fisso_fixed knob

ALU

Supporto_Support — **ø52x10mm**

	■	+																								

Descrizione_Description **MIDA**_design Leo De Carlo

Supporto_Support ALU

ø45x8mm

	■	+			X						F1 97	F9 4B	ENOX 77	BLACK RAL 9005 33	WHITE SIGNAL RAL 9016 22	PURE WHITE RAL 9010 67	WHITE BIOV* 88	NOIR BIOV* 89	ANTHRACITE RAL 7016 78	LIGHT GREY RAL 7035 82	CLAY BROWN RAL 8003 80	IVORY RAL 1015 81	DARK BROWN RAL 8017 96
	8*	CLIAO		-	3,9x25	34/32	-	-	12	2	16077020	●	●	●	●	●	●	●	●	●	●	-	●	●
	7*	CLIAO		-	3,9x25	34/32	-	-	12	2	16077001	●	●	●	●	●	●	●	●	●	●	-	●	●
	8/135	CLIAO		35-45	3,9x25	34	-	-	12	2	16077002	●	●	●	●	●	●	●	●	●	●	-	●	●
	7/135	CLIAO		35-45	3,9x25	34	-	-	12	2	16077011	●	●	●	●	●	●	●	●	●	●	-	●	●
	8/135	CLIAO		35-45	3,9x25	34/32	-	-	12	2	16077004	●	●	●	●	●	●	●	●	●	●	-	●	●
	7/135	CLIAO		35-45	3,9x25	34/32	-	-	12	2	16077013	●	●	●	●	●	●	●	●	●	●	-	●	●
	8/135	CLIAO		35-65	3,9x25	34/32	-	-	12	2	16077003	●	●	●	●	●	●	●	●	●	●	-	●	●
	7/135	CLIAO		35-65	3,9x25	34/32	-	-	12	2	16077012	●	●	●	●	●	●	●	●	●	●	-	●	●
	8/160	CLIAO		60-90	3,9x25	34/32	-	-	12	2	16077021	●	●	●	●	●	●	●	●	●	●	-	●	●
	7/160	CLIAO		60-90	3,9x25	34/32	-	-	12	2	16077022	●	●	●	●	●	●	●	●	●	●	-	●	●
	(8)/135	-		35-45	3,9x25	34/32	-	-	4	6	05112185	●	●	●	●	●	●	●	●	●	●	-	●	●
	(7)/135	-		35-45	3,9x25	34/32	-	-	4	6	05112186	●	●	●	●	●	●	●	●	●	●	-	●	●
	(6)/135	-		35-45	3,9x25	34/32	-	-	4	6	05112187	●	●	●	●	●	●	●	●	●	●	-	●	●
	(5)/135	-		35-45	3,9x25	34/32	-	-	4	6	05112258	●	●	●	●	●	●	●	●	●	●	-	●	●
	(4)/135	-		35-45	3,9x25	34/32	-	-	4	6	05112188	●	●	●	●	●	●	●	●	●	●	-	●	●
	8/135	CLIAO		35-45	3,9x25	34	-	-	12	1	17977001	●	●	●	●	●	●	●	●	●	●	-	●	●
	7/135	CLIAO		35-45	3,9x25	34	-	-	12	1	17977002	●	●	●	●	●	●	●	●	●	●	-	●	●
	8/155	CLIAO		50-55	3,9x25	34	-	-	12	1	17977003	●	●	●	●	●	●	●	●	●	●	-	●	●
	7/155	CLIAO		50-55	3,9x25	34	-	-	12	1	17977004	●	●	●	●	●	●	●	●	●	●	-	●	●
	8/165	CLIAO		60-75	3,9x25	34	-	-	12	1	17977005	●	●	●	●	●	●	●	●	●	●	-	●	●
	7/165	CLIAO		60-75	3,9x25	34	-	-	12	1	17977006	●	●	●	●	●	●	●	●	●	●	-	●	●
	8/175	CLIAO		75-90	3,9x25	34	-	-	12	1	17977007	●	●	●	●	●	●	●	●	●	●	-	●	●
	7/175	CLIAO		75-90	3,9x25	34	-	-	12	1	17977008	●	●	●	●	●	●	●	●	●	●	-	●	●

Descrizione_Description **1/2 ferro ancora**_1/2 anchor spindle

Supporto_Support STEEL

-

	■	+			X						MECHANISM 26
	8/60	CLIAO CC	-	-	-	-	-	-	10	8	06727462	●
	8/70	CLIAO CC	-	-	-	-	-	-	10	8	06727427	●
	8/80	CLIAO CC	-	-	-	-	-	-	10	8	06727428	●
	8/90	CLIAO CC	-	-	-	-	-	-	10	8	06727429	●
	8/100	CLIAO CC	-	-	-	-	-	-	10	8	06727463	●
	7/60	CLIAO CC	-	-	-	-	-	-	10	8	06727432	●
	7/70	CLIAO CC	-	-	-	-	-	-	10	8	06727433	●
	7/80	CLIAO CC	-	-	-	-	-	-	10	8	06727434	●
	7/90	CLIAO CC	-	-	-	-	-	-	10	8	06727435	●
	7/100	CLIAO CC	-	-	-	-	-	-	10	8	06727436	●

Descrizione_Description **LOFT/ROUND** pomolo fisso_fixed knob

Supporto_Support ALU

ø45x8mm

	■	+			X						F1 97	F9 4B	ENOX 77	BLACK RAL 9005 33	WHITE SIGNAL RAL 9016 22	PURE WHITE RAL 9010 67	WHITE BIOV* 88	NOIR BIOV* 89	ANTHRACITE RAL 7016 78	LIGHT GREY RAL 7035 82	CLAY BROWN RAL 8003 80	IVORY RAL 1015 81	DARK BROWN RAL 8017 96
	7* or 8*	CLIAO		-	3,9x25	34	-	-	12	1	19577001	●	●	●	●	●	●	●	●	●	●	-	●	●
	7* or 8*	CLIAO		-	3,9x25	34	-	-	12	1	19777001	●	●	●	●	●	●	●	●	●	●	-	●	●

Descrizione_Description **1/2 ferro per pomolo fisso**_1/2 fixed knob spindle

Supporto_Support STEEL

-

	■	+			X						MECHANISM 26
	7/90	CLIAO CC	-	45-55	-	-	-	-	10	8	06727507	●
	7/100	CLIAO CC	-	50-65	-	-	-	-	10	8	06727508	●
	7/110	CLIAO CC	-	60-75	-	-	-	-	10	8	06727509	●
	7/120	CLIAO CC	-	70-85	-	-	-	-	10	8	06727510	●
	7/130	CLIAO CC	-	80-95	-	-	-	-	10	8	06727551	●
	7/140	CLIAO CC	-	90-105	-	-	-	-	10	8	06727552	●
	8/90	CLIAO CC	-	45-55	-	-	-	-	10	8	06727503	●
	8/100	CLIAO CC	-	50-65	-	-	-	-	10	8	06727504	●
	8/110	CLIAO CC	-	60-75	-	-	-	-	10	8	06727505	●
	8/120	CLIAO CC	-	70-85	-	-	-	-	10	8	06727506	●
	8/130	CLIAO CC	-	80-95	-	-	-	-	10	8	06727549	●
	8/140	CLIAO CC	-	90-105	-	-	-	-	10	8	06727550	●

MIDA

design Leo De Carlo

BRASS · ZAMAK · **ALU** · AISI 316 · AISI 304

MANIGLIA PER PORTE INTERNE – SUPPORTO MINIMAL ø25x2mm_INTERNAL DOORS HANDLE – SUPPORT MINIMAL ø25x2mm

CARATTERISTICHE_FEATURES	**FISSAGGIO**_FIXING	**FINITURE**_FINISHES	**OPZIONI**_OPTIONS
CLIAQ		1.000h · 304 500h · 316 500h · **500h** · **500h** · PVD 500h · 500h	**EN-179** · REI-60 · IP-65

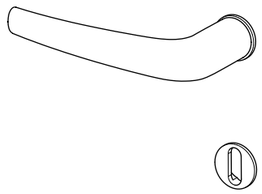

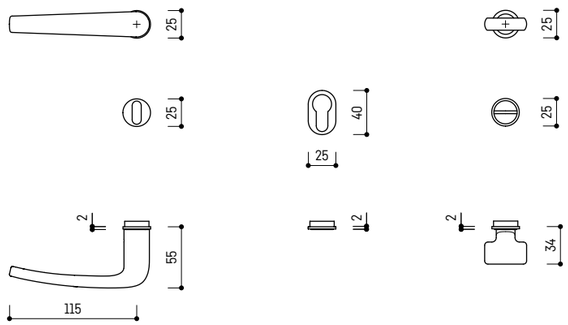

STANDARD TOILET SET

VERSIONI DISPONIBILI_AVAILABLE VERSIONS

CAPITOLATO_SPECIFICATION

ULTRACYCLE®

ULTRACYCLE® tested for over **1.000.000** cycles - **CLASS 4**

NORMA DIN EN 1906_DIN EN 1906 NORM

4 | 7 | - | 0 | 0 | 4 | 0 | A

Per una descrizione dettagliata di tutte le specifiche tecniche presenti nel prodotto, da impiegare nei capitolati o nelle offerte pubbliche, fate riferimento alla sezione CAPITOLATI_for a detailed description of all the technical informations contained in the product, to be used in the specifications or in public tenders, please refer to the SPECIFICATIONS section.

Descrizione_Description: **MIDA**_design Leo De Carlo

ALU

Supporto_Support: **ø25x2mm**

													F1 97	F9 4B	ENOX 77	BLACK RAL 9005 33	WHITE SIGNAL RAL 9016 22	PURE WHITE RAL 9010 67	WHITE BIOV* 88	NOIR BIOV* 89	ANTHRACITE RAL 7016 78	LIGHT GREY RAL 7035 82	CLAY BROWN RAL 8003 80	IVORY RAL 1015 81	DARK BROWN RAL 8707 96
	■	+																							
	8/135	CLIAQ	◎	35-45	-	-	ø20	-	12	2	16046001		●	●	●	●	●	●	●	●	●	●	-	●	●
	7/135	CLIAQ	◎	35-45	-	-	ø20	-	12	2	16046002		●	●	●	●	●	●	●	●	●	●	-	●	●
◎ ◎	-	CLIAQ	◎	-	-	-	ø20	-	24	10	06548093		●	●	●	●	●	●	●	●	●	●	-	●	●
◍ ◍	-	-	◎	-	-	-	ø20	-	24	10	06525146		●	●	●	●	●	●	●	●	●	●	-	●	●
⬯ ⬯	-	-	◎	-	-	-	-	-	24	10	06525145		●	●	●	●	●	●	●	●	●	●	-	●	●
⬭ ⬭	(8)/135	-	◎	35-45	-	-	ø20	-	4	6	05112233		●	●	●	●	●	●	●	●	●	●	-	●	●
	(7)/135	-	◎	35-45	-	-	ø20	-	4	6	05112234		●	●	●	●	●	●	●	●	●	●	-	●	●
	(6)/135	-	◎	35-45	-	-	ø20	-	4	6	05112235		●	●	●	●	●	●	●	●	●	●	-	●	●
	(5)/135	-	◎	35-45	-	-	ø20	-	4	6	05112259		●	●	●	●	●	●	●	●	●	●	-	●	●
	(4)/135	-	◎	35-45	-	-	ø20	-	4	6	05112260		●	●	●	●	●	●	●	●	●	●	-	●	●

ELIOS

design Ufficio Tecnico Opentech

BRASS | ZAMAK | **ALU** | AISI 316 | AISI 304

MANIGLIA PER PORTE INTERNE – SUPPORTO ø52x10mm_INTERNAL DOORS HANDLE – SUPPORT ø52x10mm

CARATTERISTICHE_FEATURES	**FISSAGGIO**_FIXING	**FINITURE**_FINISHES	**OPZIONI**_OPTIONS
CLAQ		1.000h · 304 500h · 316 500h · **500h** · **500h** · PVD 500h · 500h	**EN-179** · **REI-60** · **IP-65**

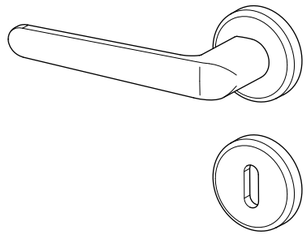

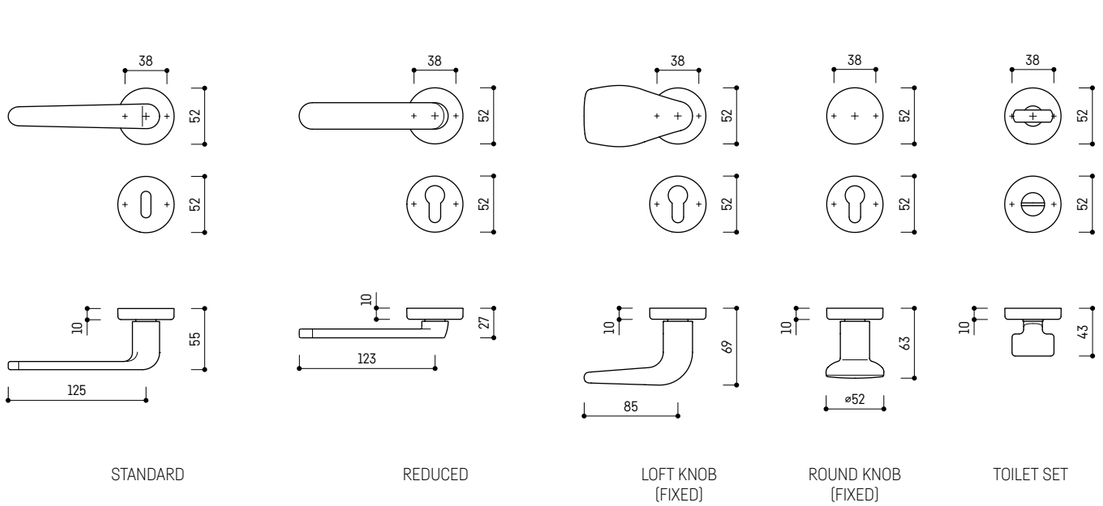

STANDARD | REDUCED | LOFT KNOB (FIXED) | ROUND KNOB (FIXED) | TOILET SET

VERSIONI DISPONIBILI_AVAILABLE VERSIONS

CAPITOLATO_SPECIFICATION

ULTRACYCLE®

ULTRACYCLE® tested for over **1.000.000** cycles - **CLASS 4**

NORMA DIN EN 1906_DIN EN 1906 NORM

4 | 7 | - | 0 | 0 | 4 | 0 | A

Per una descrizione dettagliata di tutte le specifiche tecniche presenti nel prodotto, da impiegare nei capitolati o nelle offerte pubbliche, fate riferimento alla sezione CAPITOLATI_for a detailed description of all the technical informations contained in the product, to be used in the specifications or in public tenders, please refer to the SPECIFICATIONS section.

Descrizione_Description: **ELIOS**_design Ufficio Tecnico Opentech

Supporto_Support: **ALU** · **ø52x10mm**

Descrizione_Description ELIOS_design Ufficio Tecnico Opentech

ALU

Supporto_Support ø52x10mm

												F1 97	F9 4B	ENOX 77	BLACK RAL 9005 33	WHITE SIGNAL RAL 9016 22	PURE WHITE RAL 9010 67	WHITE BIOV* 88	NOIR BIOV* 89	ANTHRACITE RAL 7024 78	LIGHT GREY RAL 7035 82	CLAY BROWN RAL 8003 80	IVORY RAL 1015 81	DARK BROWN RAL 8707 96
	7/135	90°		35-45	3,9x25	38	-	-	24	1	15998012	●	●	●	●	●	●	●	●	●	●	-	●	●
	8/160	90°		60-90	3,9x65 3,9x75 3,9x95	38	Ø8	-	24	1	15902083	●	●	●	●	●	●	●	●	●	●	-	●	●
	8/160	90°		60-90	3,9x25 3,9x65 3,9x75 3,9x95	38	Ø8	-	24	1	15902084	●	●	●	●	●	●	●	●	●	●	-	●	●
	7/160	90°		60-90	3,9x25 3,9x65 3,9x75 3,9x95	38	Ø8	-	24	1	15902085	●	●	●	●	●	●	●	●	●	●	-	●	●
	8/160	90°		60-90	3,9x25 3,9x65 3,9x75 3,9x95	38	Ø8	-	24	1	15998013	●	●	●	●	●	●	●	●	●	●	-	●	●
	7/160	90°		60-90	3,9x25 3,9x65 3,9x75 3,9x95	38	Ø8	-	24	1	15998014	●	●	●	●	●	●	●	●	●	●	-	●	●
	8/160	90°		60-90	3,9x25	38	-	-	24	1	15902086	●	●	●	●	●	●	●	●	●	●	-	●	●
	7/160	90°		60-90	3,9x25	38	-	-	24	1	15902087	●	●	●	●	●	●	●	●	●	●	-	●	●
	8/160	90°		60-90	3,9x25	38	-	-	24	1	15998015	●	●	●	●	●	●	●	●	●	●	-	●	●
	7/160	90°		60-90	3,9x25	38	-	-	24	1	15998016	●	●	●	●	●	●	●	●	●	●	-	●	●
	(8)/135			35-45	3,9x50	38	Ø8	-	24	1	05112077	●	●	●	●	●	●	●	●	●	●	-	●	●
	(8)/135			35-45	3,9x25 3,9x50	38	Ø8	-	24	1	05112065	●	●	●	●	●	●	●	●	●	●	-	●	●
	(7)/135			35-45	3,9x25 3,9x50	38	Ø8	-	24	1	05112066	●	●	●	●	●	●	●	●	●	●	-	●	●
	(6)/135			35-45	3,9x25 3,9x50	38	Ø8	-	24	1	05112067	●	●	●	●	●	●	●	●	●	●	-	●	●
	(5)/135			35-45	3,9x25 3,9x50	38	Ø8	-	24	1	05112255	●	●	●	●	●	●	●	●	●	●	-	●	●
	(4)/135			35-45	3,9x25 3,9x50	38	Ø8	-	24	1	05112068	●	●	●	●	●	●	●	●	●	●	-	●	●
	(8)/135			35-45	3,9x50	38	Ø8	-	24	1	05112092	●	●	●	●	●	●	●	●	●	●	-	●	●
	(8)/135			35-45	3,9x25 3,9x50	38	Ø8	-	24	1	05112080	●	●	●	●	●	●	●	●	●	●	-	●	●
	(7)/135			35-45	3,9x25 3,9x50	38	Ø8	-	24	1	05112081	●	●	●	●	●	●	●	●	●	●	-	●	●
	(6)/135			35-45	3,9x25 3,9x50	38	Ø8	-	24	1	05112082	●	●	●	●	●	●	●	●	●	●	-	●	●
	(5)/135			35-45	3,9x25 3,9x50	38	Ø8	-	24	1	05112256	●	●	●	●	●	●	●	●	●	●	-	●	●
	(4)/135			35-45	3,9x25 3,9x50	38	Ø8	-	24	1	05112083	●	●	●	●	●	●	●	●	●	●	-	●	●
	8/135			35-45	3,9x25 3,9x50	38	Ø8	-	12	1	17902005	●	●	●	●	●	●	●	●	●	●	-	●	●

Descrizione_Description ELIOS_design Ufficio Tecnico Opentech

ALU

Supporto_Support ø52x10mm

												F1 97	F9 4B	ENOX 77	BLACK RAL 9005 33	WHITE SIGNAL RAL 9016 22	PURE WHITE RAL 9010 67	WHITE BIOV* 88	NOIR BIOV* 89	ANTHRACITE RAL 7024 78	LIGHT GREY RAL 7035 82	CLAY BROWN RAL 8003 80	IVORY RAL 1015 81	DARK BROWN RAL 8707 96
	7/135			35-45	3,9x25 3,9x50	38	Ø8	-	12	1	17902006	●	●	●	●	●	●	●	●	●	●	-	●	●
	8/155			50-55	3,9x25 3,9x70	38	Ø8	-	12	1	17902007	●	●	●	●	●	●	●	●	●	●	-	●	●
	7/155			50-55	3,9x25 3,9x70	38	Ø8	-	12	1	17902008	●	●	●	●	●	●	●	●	●	●	-	●	●
	8/165			60-75	3,9x25 3,9x65 3,9x75 3,9x95	38	Ø8	-	12	1	17902009	●	●	●	●	●	●	●	●	●	●	-	●	●
	7/165			60-75	3,9x25 3,9x65 3,9x75 3,9x95	38	Ø8	-	12	1	17902010	●	●	●	●	●	●	●	●	●	●	-	●	●
	8/175			75-90	3,9x25 3,9x65 3,9x75 3,9x95	38	Ø8	-	12	1	17902011	●	●	●	●	●	●	●	●	●	●	-	●	●
	7/175			75-90	3,9x25 3,9x65 3,9x75 3,9x95	38	Ø8	-	12	1	17902012	●	●	●	●	●	●	●	●	●	●	-	●	●

Descrizione_Description 1/2 ferro ancora_1/2 anchor spindle

STEEL

Supporto_Support -

											MECHANISM 26
	8/60		-	-	-	-	-	-	10	8	06727462	●
	8/70		-	-	-	-	-	-	10	8	06727427	●
	8/80		-	-	-	-	-	-	10	8	06727428	●
	8/90		-	-	-	-	-	-	10	8	06727429	●
	8/100		-	-	-	-	-	-	10	8	06727463	●
	7/60		-	-	-	-	-	-	10	8	06727432	●
	7/70		-	-	-	-	-	-	10	8	06727433	●
	7/80		-	-	-	-	-	-	10	8	06727434	●
	7/90		-	-	-	-	-	-	10	8	06727435	●
	7/100		-	-	-	-	-	-	10	8	06727436	●

Descrizione_Description — **LOFT/ROUND** pomolo fisso_fixed knob

ALU

Supporto_Support — **ø52x10mm**

| | | |

Descrizione_Description **ELIOS**_design Ufficio Tecnico Opentech

Supporto_Support ALU

ø45x8mm

■	+			X							F1 97	F9 4B	ENOX 77	BLACK RAL 9005 33	WHITE SIGNAL RAL 9016 22	PURE WHITE RAL 9010 67	WHITE BIOV* 88	NOIR BIOV* 89	ANTHRACITE RAL 7016 78	LIGHT GREY RAL 7035 82	CLAY BROWN RAL 8003 80	IVORY RAL 1015 81	DARK BROWN RAL 8707 96
8*	CLAK		-	3,9x25	34/32	-	-	12	2	15977001	●	●	●	●	●	●	●	●	●	●	-	●	●
7*	CLAK		-	3,9x25	34/32	-	-	12	2	15977012	●	●	●	●	●	●	●	●	●	●	-	●	●
8/135	CLAK		35-45	3,9x25	34	-	-	12	2	15977002	●	●	●	●	●	●	●	●	●	●	-	●	●
7/135	CLAK		35-45	3,9x25	34	-	-	12	2	15977013	●	●	●	●	●	●	●	●	●	●	-	●	●
8/135	CLAK		35-45	3,9x25	34/32	-	-	12	2	15977028	●	●	●	●	●	●	●	●	●	●	-	●	●
7/135	CLAK		35-45	3,9x25	34/32	-	-	12	2	15977015	●	●	●	●	●	●	●	●	●	●	-	●	●
8/135	CLAK		35-65	3,9x25	34/32	-	-	12	2	15977027	●	●	●	●	●	●	●	●	●	●	-	●	●
7/135	CLAK		35-65	3,9x25	34/32	-	-	12	2	15977014	●	●	●	●	●	●	●	●	●	●	-	●	●
8/160	CLAK		60-90	3,9x25	34/32	-	-	12	2	15977029	●	●	●	●	●	●	●	●	●	●	-	●	●
7/160	CLAK		60-90	3,9x25	34/32	-	-	12	2	15977030	●	●	●	●	●	●	●	●	●	●	-	●	●
(8)/135	-		35-45	3,9x25	34/32	-	-	4	6	05112185	●	●	●	●	●	●	●	●	●	●	-	●	●
(7)/135	-		35-45	3,9x25	34/32	-	-	4	6	05112186	●	●	●	●	●	●	●	●	●	●	-	●	●
(6)/135	-		35-45	3,9x25	34/32	-	-	4	6	05112187	●	●	●	●	●	●	●	●	●	●	-	●	●
(5)/135	-		35-45	3,9x25	34/32	-	-	4	6	05112258	●	●	●	●	●	●	●	●	●	●	-	●	●
(4)/135	-		35-45	3,9x25	34/32	-	-	4	6	05112188	●	●	●	●	●	●	●	●	●	●	-	●	●
8/135	CLAK		35-45	3,9x25	34	-	-	12	1	17977001	●	●	●	●	●	●	●	●	●	●	-	●	●
7/135	CLAK		35-45	3,9x25	34	-	-	12	1	17977002	●	●	●	●	●	●	●	●	●	●	-	●	●
8/155	CLAK		50-55	3,9x25	34	-	-	12	1	17977003	●	●	●	●	●	●	●	●	●	●	-	●	●
7/155	CLAK		50-55	3,9x25	34	-	-	12	1	17977004	●	●	●	●	●	●	●	●	●	●	-	●	●
8/165	CLAK		60-75	3,9x25	34	-	-	12	1	17977005	●	●	●	●	●	●	●	●	●	●	-	●	●
7/165	CLAK		60-75	3,9x25	34	-	-	12	1	17977006	●	●	●	●	●	●	●	●	●	●	-	●	●
8/175	CLAK		75-90	3,9x25	34	-	-	12	1	17977007	●	●	●	●	●	●	●	●	●	●	-	●	●
7/175	CLAK		75-90	3,9x25	34	-	-	12	1	17977008	●	●	●	●	●	●	●	●	●	●	-	●	●

Descrizione_Description **1/2 ferro ancora**_1/2 anchor spindle

Supporto_Support STEEL

-

■	+			X							MECHANISM 26
8/60	CLAK CE	-	-	-	-	-	-	10	8	06727462	●
8/70	CLAK CE	-	-	-	-	-	-	10	8	06727427	●
8/80	CLAK CE	-	-	-	-	-	-	10	8	06727428	●
8/90	CLAK CE	-	-	-	-	-	-	10	8	06727429	●
8/100	CLAK CE	-	-	-	-	-	-	10	8	06727463	●
7/60	CLAK CE	-	-	-	-	-	-	10	8	06727432	●
7/70	CLAK CE	-	-	-	-	-	-	10	8	06727433	●
7/80	CLAK CE	-	-	-	-	-	-	10	8	06727434	●
7/90	CLAK CE	-	-	-	-	-	-	10	8	06727435	●
7/100	CLAK CE	-	-	-	-	-	-	10	8	06727436	●

Descrizione_Description **LOFT/ROUND** pomolo fisso_fixed knob

Supporto_Support ALU

ø45x8mm

■	+			X							F1 97	F9 4B	ENOX 77	BLACK RAL 9005 33	WHITE SIGNAL RAL 9016 22	PURE WHITE RAL 9010 67	WHITE BIOV* 88	NOIR BIOV* 89	ANTHRACITE RAL 7016 78	LIGHT GREY RAL 7035 82	CLAY BROWN RAL 8003 80	IVORY RAL 1015 81	DARK BROWN RAL 8707 96
7* or 8*	CLAK		-	3,9x25	34	-	-	12	1	19577001	●	●	●	●	●	●	●	●	●	●	-	●	●
7* or 8*	CLAK		-	3,9x25	34	-	-	12	1	19777001	●	●	●	●	●	●	●	●	●	●	-	●	●

Descrizione_Description **1/2 ferro per pomolo fisso**_1/2 fixed knob spindle

Supporto_Support STEEL

-

■	+			X							MECHANISM 26
7/90	CLAK CE	-	45-55	-	-	-	-	10	8	06727507	●
7/100	CLAK CE	-	50-65	-	-	-	-	10	8	06727508	●
7/110	CLAK CE	-	60-75	-	-	-	-	10	8	06727509	●
7/120	CLAK CE	-	70-85	-	-	-	-	10	8	06727510	●
7/130	CLAK CE	-	80-95	-	-	-	-	10	8	06727551	●
7/140	CLAK CE	-	90-105	-	-	-	-	10	8	06727552	●
8/90	CLAK CE	-	45-55	-	-	-	-	10	8	06727503	●
8/100	CLAK CE	-	50-65	-	-	-	-	10	8	06727504	●
8/110	CLAK CE	-	60-75	-	-	-	-	10	8	06727505	●
8/120	CLAK CE	-	70-85	-	-	-	-	10	8	06727506	●
8/130	CLAK CE	-	80-95	-	-	-	-	10	8	06727549	●
8/140	CLAK CE	-	90-105	-	-	-	-	10	8	06727550	●

ELIOS

design Ufficio Tecnico Opentech

BRASS · ZAMAK · **ALU** · AISI 316 · AISI 304

MANIGLIA PER PORTE INTERNE – SUPPORTO MINIMAL ø25x2mm _INTERNAL DOORS HANDLE – SUPPORT MINIMAL ø25x2mm

CARATTERISTICHE_FEATURES	**FISSAGGIO**_FIXING	**FINITURE**_FINISHES	**OPZIONI**_OPTIONS
		1.000h · 500h · 500h · **500h** · **500h** · 500h · 500h	**EN-179**

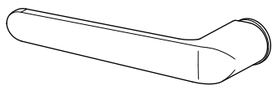

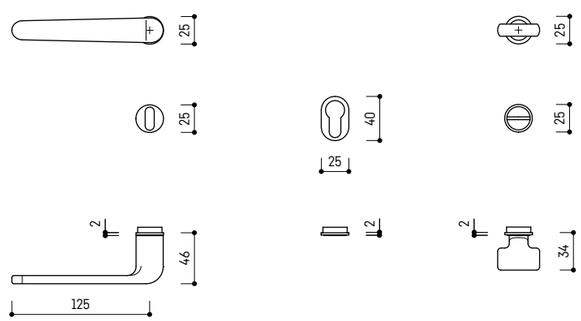

STANDARD TOILET SET

VERSIONI DISPONIBILI_AVAILABLE VERSIONS

CAPITOLATO_SPECIFICATION

ULTRACYCLE® tested for over **1.000.000** cycles - **CLASS 4**

NORMA DIN EN 1906_DIN EN 1906 NORM

4 | 7 | - | 0 | 0 | 4 | 0 | A

Per una descrizione dettagliata di tutte le specifiche tecniche presenti nel prodotto, da impiegare nei capitolati o nelle offerte pubbliche, fate riferimento alla sezione CAPITOLATI_for a detailed description of all the technical informations contained in the product, to be used in the specifications or in public tenders, please refer to the SPECIFICATIONS section.

Descrizione_Description: **ELIOS**_design Ufficio Tecnico Opentech

ALU

Supporto_Support: **ø25x2mm**

■	+	x	x	x	x						F1 97	F9 4B	ENOX 77	BLACK RAL 9005 33	WHITE SIGNAL RAL 9016 22	PURE WHITE RAL 9010 67	WHITE BIOV* 88	NOIR BIOV* 89	ANTHRACITE RAL 7016 78	LIGHT GREY RAL 7035 82	CLAY BROWN RAL 8003 80	IVORY RAL 1015 81	DARK BROWN RAL 8017 96
8/135	CLAQ	35-45	-	-	ø20	-	12	2	15946001	●	●	●	●	●	●	●	●	●	●	-	●	●
7/135	CLAQ	35-45	-	-	ø20	-	12	2	15946002	●	●	●	●	●	●	●	●	●	●	-	●	●
-	CLAQ	-	-	-	ø20	-	24	10	06548093	●	●	●	●	●	●	●	●	●	●	-	●	●
-	-	-	-	-	ø20	-	24	10	06525146	●	●	●	●	●	●	●	●	●	●	-	●	●
-	-	-	-	-	-	-	24	10	06525145	●	●	●	●	●	●	●	●	●	●	-	●	●
(8)/135	-	35-45	-	-	ø20	-	4	6	05112233	●	●	●	●	●	●	●	●	●	●	-	●	●
(7)/135	-	35-45	-	-	ø20	-	4	6	05112234	●	●	●	●	●	●	●	●	●	●	-	●	●
(6)/135	-	35-45	-	-	ø20	-	4	6	05112235	●	●	●	●	●	●	●	●	●	●	-	●	●
(5)/135	-	35-45	-	-	ø20	-	4	6	05112259	●	●	●	●	●	●	●	●	●	●	-	●	●
(4)/135	-	35-45	-	-	ø20	-	4	6	05112260	●	●	●	●	●	●	●	●	●	●	-	●	●

CUBIC

design Leo De Carlo

BRASS · ZAMAK · **ALU** · AISI 316 · AISI 304

MANIGLIA PER PORTE INTERNE – SUPPORTO 55x55x12mm_INTERNAL DOORS HANDLE – SUPPORT 55x55x12mm

CARATTERISTICHE_FEATURES	**FISSAGGIO**_FIXING	**FINITURE**_FINISHES	**OPZIONI**_OPTIONS
		1.000h · 500h · 500h · 500h · 500h · 500h · 500h	EN-179 · REI-60 · IP-65

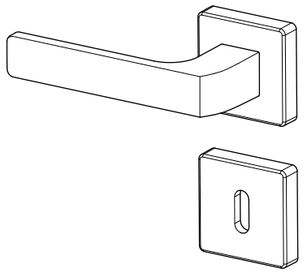

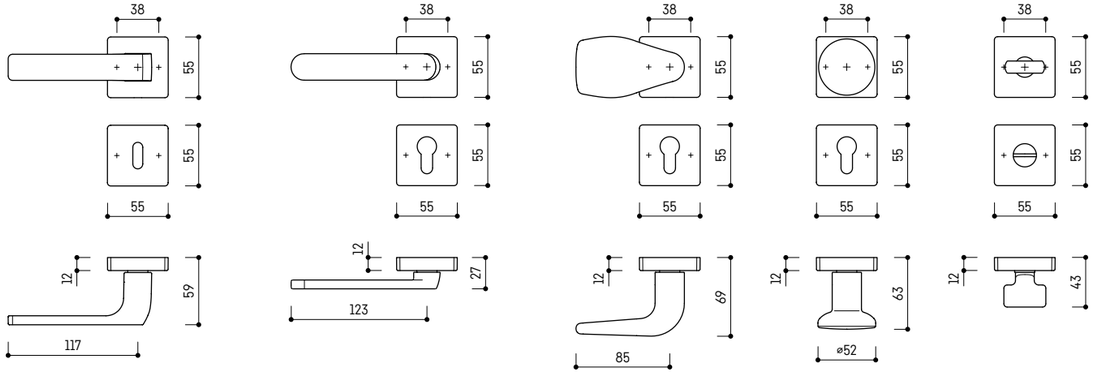

STANDARD · REDUCED · LOFT KNOB (FIXED) · ROUND KNOB (FIXED) · TOILET SET

VERSIONI DISPONIBILI_AVAILABLE VERSIONS

CAPITOLATO_SPECIFICATION

ULTRACYCLE®

ULTRACYCLE® tested for over **1.000.000** cycles - **CLASS 4**

NORMA DIN EN 1906_DIN EN 1906 NORM

4 | 7 | - | 0 | 0 | 4 | 0 | A

Per una descrizione dettagliata di tutte le specifiche tecniche presenti nel prodotto, da impiegare nei capitolati o nelle offerte pubbliche, fate riferimento alla sezione CAPITOLATI for a detailed description of all the technical informations contained in the product, to be used in the specifications or in public tenders, please refer to the SPECIFICATIONS section.

Descrizione_Description: **CUBIC**_design Leo De Carlo

ALU

Supporto_Support: 55x55x12mm

												F1 97	F9 4B	ENOX 77	BLACK RAL 9005 33	WHITE SIGNAL RAL 9016 22	PURE WHITE RAL 9010 67	WHITE BIO* 88	NOIR BIO* 89	ANTHRACITE RAL 7016 78	LIGHT GREY RAL 7035 82	CLAY BROWN RAL 8003 80	IVORY RAL 1015 81	DARK BROWN RAL 8017 96
	8*		-	3,9x50	38	Ø8	-	12	2	17497005		●	●	●	●	●	●	●	●	●	●	-	●	●
	8*		-	3,9x25 3,9x50	38	Ø8	-	12	2	17497006		●	●	●	●	●	●	●	●	●	●	-	●	●
	7*		-	3,9x25 3,9x50	38	Ø8	-	12	2	17497007		●	●	●	●	●	●	●	●	●	●	-	●	●
	8*		-	3,9x25	38	Ø8	-	12	2	17497008		●	●	●	●	●	●	●	●	●	●	-	●	●
	7*		-	3,9x25	38	Ø8	-	12	2	17497009		●	●	●	●	●	●	●	●	●	●	-	●	●
	8/135		35-45	3,9x50	38	Ø8	-	12	2	17497010		●	●	●	●	●	●	●	●	●	●	-	●	●
	8/135		35-45	3,9x25 3,9x50	38	Ø8	-	12	2	17497011		●	●	●	●	●	●	●	●	●	●	-	●	●
	7/135		35-45	3,9x25 3,9x50	38	Ø8	-	12	2	17497012		●	●	●	●	●	●	●	●	●	●	-	●	●
	8/135		35-65	3,9x25 3,9x50	38	Ø8	-	12	2	17497013		●	●	●	●	●	●	●	●	●	●	-	●	●
	7/135		35-65	3,9x25 3,9x50	38	Ø8	-	12	2	17497014		●	●	●	●	●	●	●	●	●	●	-	●	●
	8/135		35-45	3,9x50	38	Ø8	-	12	2	17497016		●	●	●	●	●	●	●	●	●	●	-	●	●
	8/135		35-45	3,9x25 3,9x50	38	Ø8	-	12	2	17497019		●	●	●	●	●	●	●	●	●	●	-	●	●
	7/135		35-45	3,9x25 3,9x50	38	Ø8	-	12	2	17497020		●	●	●	●	●	●	●	●	●	●	-	●	●
	8/135		35-45	3,9x25	38	-	-	12	2	17497023		●	●	●	●	●	●	●	●	●	●	-	●	●
	7/135		35-45	3,9x25	38	-	-	12	2	17497024		●	●	●	●	●	●	●	●	●	●	-	●	●
	8/135		35-45	3,9x50	38	Ø8	-	12	2	17497015		●	●	●	●	●	●	●	●	●	●	-	●	●
	8/135		35-45	3,9x25 3,9x50	38	Ø8	-	12	2	17497017		●	●	●	●	●	●	●	●	●	●	-	●	●
	7/135		35-45	3,9x25 3,9x50	38	Ø8	-	12	2	17497018		●	●	●	●	●	●	●	●	●	●	-	●	●
	8/135	90°	35-45	3,9x25 3,9x50	38	Ø8	-	12	2	17499009		●	●	●	●	●	●	●	●	●	●	-	●	●
	7/135	90°	35-45	3,9x25 3,9x50	38	Ø8	-	12	2	17499010		●	●	●	●	●	●	●	●	●	●	-	●	●
	8/135		35-45	3,9x25	38	-	-	12	2	17497021		●	●	●	●	●	●	●	●	●	●	-	●	●
	7/135		35-45	3,9x25	38	-	-	12	2	17497022		●	●	●	●	●	●	●	●	●	●	-	●	●
	8/135	90°	35-45	3,9x25	38	-	-	12	2	17499011		●	●	●	●	●	●	●	●	●	●	-	●	●

Descrizione_Description **CUBIC**_design Leo De Carlo

ALU

Supporto_Support **55x55x12mm**

| | | |

Descrizione_Description | **1/2 ferro per pomolo fisso**_1/2 fixed knob spindle

STEEL

Supporto_Support | -

											MECHANISM 26
7/90	CLAO	-	45-55	-	-	-	-	10	8	06727507	●
7/100	CLAO	-	50-65	-	-	-	-	10	8	06727508	●
7/110	CLAO	-	60-75	-	-	-	-	10	8	06727509	●
7/120	CLAO	-	70-85	-	-	-	-	10	8	06727510	●
7/130	CLAO	-	80-95	-	-	-	-	10	8	06727551	●
7/140	CLAO	-	90-105	-	-	-	-	10	8	06727552	●
8/90	CLAO	-	45-55	-	-	-	-	10	8	06727503	●
8/100	CLAO	-	50-65	-	-	-	-	10	8	06727504	●
8/110	CLAO	-	60-75	-	-	-	-	10	8	06727505	●
8/120	CLAO	-	70-85	-	-	-	-	10	8	06727506	●
8/130	CLAO	-	80-95	-	-	-	-	10	8	06727549	●
8/140	CLAO	-	90-105	-	-	-	-	10	8	06727550	●

CUBIC

design Leo De Carlo

BRASS | ZAMAK | **ALU** | AISI 316 | AISI 304

MANIGLIA PER PORTE INTERNE – SUPPORTO MINIMAL 25x25x2mm_INTERNAL DOORS HANDLE – SUPPORT MINIMAL 25x25x2mm

CARATTERISTICHE_FEATURES	**FISSAGGIO**_FIXING	**FINITURE**_FINISHES	**OPZIONI**_OPTIONS
CLAO		1.000h | 500h | 500h | **500h** | **500h** | 500h | 500h	EN-179

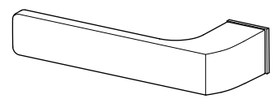

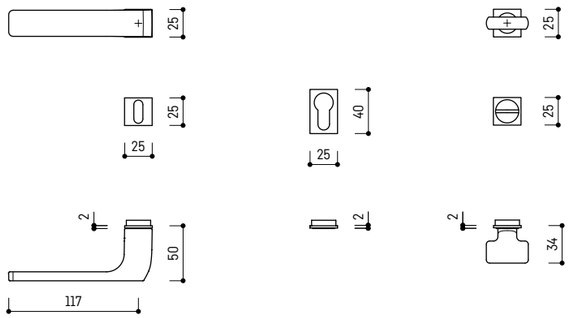

STANDARD | TOILET SET

VERSIONI DISPONIBILI_AVAILABLE VERSIONS	**CAPITOLATO**_SPECIFICATION
	ULTRACYCLE® tested for over **1.000.000** cycles - **CLASS 4** **NORMA DIN EN 1906**_DIN EN 1906 NORM 4 | 7 | - | 0 | 0 | 4 | 0 | A
	Per una descrizione dettagliata di tutte le specifiche tecniche presenti nel prodotto, da impiegare nei capitolati o nelle offerte pubbliche, fate riferimento alla sezione CAPITOLATI_for a detailed description of all the technical informations contained in the product, to be used in the specifications or in public tenders, please refer to the SPECIFICATIONS section.

Descrizione_Description | **CUBIC**_design Leo De Carlo

ALU

Supporto_Support | **MINIMAL** 25x25x2mm

| | | |

Descrizione_Description DRITTA_design Leo De Carlo

AISI316

Supporto_Support ø52x10mm

												NATURAL 316 48	PLATINUM ABACO® 62	BLACK PEARL SATIN PVD 9B	COPPER SATIN PVD 1C	NOIR SATIN PVD 2C	NATURAL GOLD SATIN PVD 3C
	8*		-	3,9x25 3,9x50	38	Ø8	-	12	2	10502058	●	●	●	●	●	●
	7*		-	3,9x25 3,9x50	38	Ø8	-	12	2	10502059	●	●	●	●	●	●
	8/135		35-45	3,9x50	38	Ø8	-	12	2	10502060	●	●	●	●	●	●
	8/135		35-45	3,9x25 3,9x50	38	Ø8	-	12	2	10502061	●	●	●	●	●	●
	7/135		35-45	3,9x25 3,9x50	38	Ø8	-	12	2	10502008	●	●	●	●	●	●
	8/135		35-65	3,9x25	38	Ø8	-	12	2	10502062	●	●	●	●	●	●
	7/135		35-65	3,9x25	38	Ø8	-	12	2	10502071	●	●	●	●	●	●
	8/135		35-45	3,9x50	38	Ø8	-	12	2	10502064	●	●	●	●	●	●
	8/135		35-45	3,9x25 3,9x50	38	Ø8	-	12	2	10502066	●	●	●	●	●	●
	7/135		35-45	3,9x25 3,9x50	38	Ø8	-	12	2	10502002	●	●	●	●	●	●
	8/135		35-45	3,9x25	38	-	-	12	2	10502069	●	●	●	●	●	●
	7/135		35-45	3,9x25	38	-	-	12	2	10502070	●	●	●	●	●	●
	8/135		35-45	3,9x50	38	Ø8	-	12	2	10502063	●	●	●	●	●	●
	8/160		60-90	3,9x25 3,9x75 3,9x95	38	Ø8	-	12	2	10502072	●	●	●	●	●	●
	8/135		35-45	3,9x25 3,9x50	38	Ø8	-	12	2	10502065	●	●	●	●	●	●
	8/160		60-90	3,9x25 3,9x75 3,9x95	38	Ø8	-	12	2	10502073	●	●	●	●	●	●
	7/135		35-45	3,9x25 3,9x50	38	Ø8	-	12	2	10502015	●	●	●	●	●	●
	7/160		60-90	3,9x25 3,9x75 3,9x95	38	Ø8	-	12	2	10502074	●	●	●	●	●	●
	8/135		35-65	3,9x25	38	Ø8	-	12	2	10502067	●	●	●	●	●	●
	8/160		60-90	3,9x25	38	Ø8	-	12	2	10502075	●	●	●	●	●	●
	7/135		35-65	3,9x25	38	Ø8	-	12	2	10502068	●	●	●	●	●	●
	7/160		60-90	3,9x25	38	Ø8	-	12	2	10502076	●	●	●	●	●	●
	(8)/135		35-45	3,9x50	38	Ø8	-	4	6	05112122	●	●	●	●	●	●

Descrizione_Description DRITTA_design Leo De Carlo

AISI316

Supporto_Support ø52x10mm

											NATURAL 316 48	PLATINUM ABACO® 62	BLACK PEARL SATIN PVD 9B	COPPER SATIN PVD 1C	NOIR SATIN PVD 2C	NATURAL GOLD SATIN PVD 3C
	(8)/135		35-45	3,9x25 3,9x50	38	Ø8	-	4	6	05112110	●	●	●	●	●	●
	(7)/135		35-45	3,9x25 3,9x50	38	Ø8	-	4	6	05112111	●	●	●	●	●	●
	(6)/135		35-45	3,9x25 3,9x50	38	Ø8	-	4	6	05112112	●	●	●	●	●	●
	(5)/135		35-45	3,9x25 3,9x50	38	Ø8	-	4	6	05112254	●	●	●	●	●	●
	(4)/135		35-45	3,9x25 3,9x50	38	Ø8	-	4	6	05112113	●	●	●	●	●	●
	(8)/135		35-45	3,9x50	38	Ø8	-	4	6	05112137	●	●	●	●	●	●
	(8)/135		35-45	3,9x25 - 3,9x50	38	Ø8	-	4	6	05112125	●	●	●	●	●	●
	(7)/135		35-45	3,9x25 - 3,9x50	38	Ø8	-	4	6	05112126	●	●	●	●	●	●
	(6)/135		35-45	3,9x25 - 3,9x50	38	Ø8	-	4	6	05112127	●	●	●	●	●	●
	(5)/135		35-45	3,9x25 - 3,9x50	38	Ø8	-	4	6	05112265	●	●	●	●	●	●
	(4)/135		35-45	3,9x25 - 3,9x50	38	Ø8	-	4	6	05112128	●	●	●	●	●	●
	8/135		35-45	3,9x25 3,9x50	38	Ø8	-	12	1	19402005	●	●	●	●	●	●
	7/135		35-45	3,9x25 3,9x50	38	Ø8	-	12	1	19402006	●	●	●	●	●	●
	8/155		50-55	3,9x25 3,9x70	38	Ø8	-	12	1	19402007	●	●	●	●	●	●
	7/155		50-55	3,9x25 3,9x70	38	Ø8	-	12	1	19402008	●	●	●	●	●	●
	8/165		60-75	3,9x25 3,9x65 3,9x75 3,9x95	38	Ø8	-	12	1	19402009	●	●	●	●	●	●
	7/165		60-75	3,9x25 3,9x65 3,9x75 3,9x95	38	Ø8	-	12	1	19402010	●	●	●	●	●	●
	8/175		75-90	3,9x25 3,9x65 3,9x75 3,9x95	38	Ø8	-	12	1	19402011	●	●	●	●	●	●
	7/175		75-90	3,9x25 3,9x65 3,9x75 3,9x95	38	Ø8	-	12	1	19402012	●	●	●	●	●	●

Descrizione_Description **1/2 ferro ancora**_1/2 anchor spindle

STEEL

Supporto_Support -

												MECHANISM 26
8/60	CLAD	-	-	-	-	-	-	10	8	06727462		●
8/70	CLAD	-	-	-	-	-	-	10	8	06727427		●
8/80	CLAD	-	-	-	-	-	-	10	8	06727428		●
8/90	CLAD	-	-	-	-	-	-	10	8	06727429		●
8/100	CLAD	-	-	-	-	-	-	10	8	06727463		●
7/60	CLAD	-	-	-	-	-	-	10	8	06727432		●
7/70	CLAD	-	-	-	-	-	-	10	8	06727433		●
7/80	CLAD	-	-	-	-	-	-	10	8	06727434		●
7/90	CLAD	-	-	-	-	-	-	10	8	06727435		●
7/100	CLAD	-	-	-	-	-	-	10	8	06727436		●

Descrizione_Description **LOFT** pomolo fisso_fixed knob

ZAMAK for AISI316

Supporto_Support ø52x10mm

											PLATINUM PVD 03	PLATINUM ABACO® 62	BLACK PEARL SATIN PVD 9B	COPPER SATIN PVD 1C	NOIR SATIN PVD 2C	NATURAL GOLD SATIN PVD 3C
7* or 8*	CLAD		-	3,9x25 3,9x50	38	Ø8	-	12	1	17002001	●	●	●	●	●	●

Descrizione_Description **ROUND** pomolo fisso_fixed knob

AISI316

Supporto_Support ø52x10mm

											NATURAL 316 48	PLATINUM ABACO® 62	BLACK PEARL SATIN PVD 9B	COPPER SATIN PVD 1C	NOIR SATIN PVD 2C	NATURAL GOLD SATIN PVD 3C
7* or 8*	CLAD		-	3,9x25 3,9x50	38	Ø8	-	12	1	19802001	●	●	●	●	●	●

Descrizione_Description **1/2 ferro per pomolo fisso**_1/2 fixed knob spindle

STEEL

Supporto_Support -

											MECHANISM 26
7/90	CLAD	-	45-55	-	-	-	-	10	8	06727507	●
7/100	CLAD	-	50-65	-	-	-	-	10	8	06727508	●
7/110	CLAD	-	60-75	-	-	-	-	10	8	06727509	●
7/120	CLAD	-	70-85	-	-	-	-	10	8	06727510	●
7/130	CLAD	-	80-95	-	-	-	-	10	8	06727551	●
7/140	CLAD	-	90-105	-	-	-	-	10	8	06727552	●
8/90	CLAD	-	45-55	-	-	-	-	10	8	06727503	●
8/100	CLAD	-	50-65	-	-	-	-	10	8	06727504	●
8/110	CLAD	-	60-75	-	-	-	-	10	8	06727505	●
8/120	CLAD	-	70-85	-	-	-	-	10	8	06727506	●
8/130	CLAD	-	80-95	-	-	-	-	10	8	06727549	●
8/140	CLAD	-	90-105	-	-	-	-	10	8	06727550	●

DRITTA

design Leo De Carlo

BRASS · ZAMAK · ALU · **AISI 316** · AISI 304

MANIGLIA PER PORTE INTERNE – SUPPORTO ø45x8mm _INTERNAL DOORS HANDLE – SUPPORT ø45x8mm

CARATTERISTICHE_FEATURES	**FISSAGGIO**_FIXING	**FINITURE**_FINISHES	**OPZIONI**_OPTIONS
		1.500h · 500h · 500h · 500h · 500h · 500h · 500h	EN-179 · REI-60 · IP-65

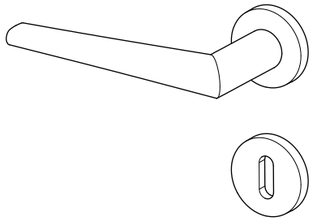

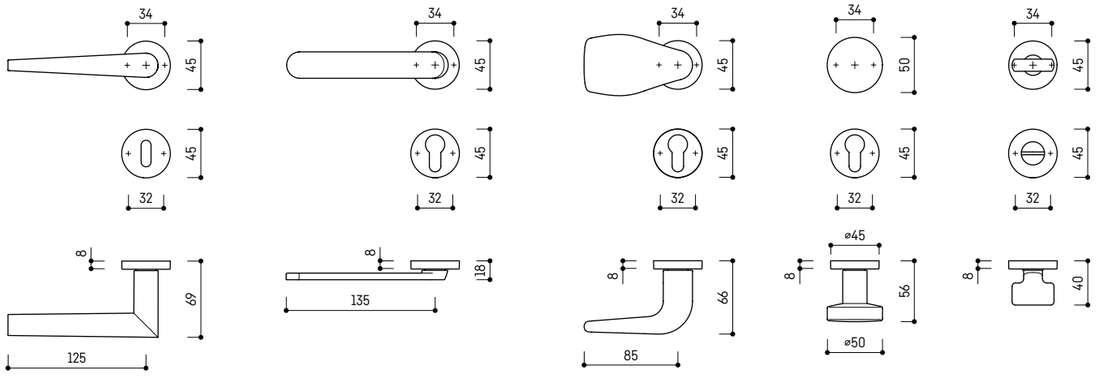

STANDARD · REDUCED · LOFT KNOB (FIXED) · ROUND KNOB (FIXED) · TOILET SET

VERSIONI DISPONIBILI_AVAILABLE VERSIONS

CAPITOLATO_SPECIFICATION

ULTRACYCLE®

ULTRACYCLE® tested for over **1.000.000** cycles - **CLASS 4**

NORMA DIN EN 1906_DIN EN 1906 NORM

4 | 7 | - | 0 | 0 | 4 | 0 | A

Per una descrizione dettagliata di tutte le specifiche tecniche presenti nel prodotto, da impiegare nei capitolati o nelle offerte pubbliche, fate riferimento alla sezione CAPITOLATI_for a detailed description of all the technical informations contained in the product, to be used in the specifications or in public tenders, please refer to the SPECIFICATIONS section.

Descrizione_Description: **DRITTA**_design Leo De Carlo

AISI316

Supporto_Support: **ø45X8mm**

												NATURAL 316 48	PLATINUM ABACO® 62	BLACK PEARL SATIN 9B	COPPER SATIN 1C	NOIR SATIN 2C	NATURAL GOLD SATIN 3C
	8*	CLAQ		-	3,9x25	34/32	-	-	12	2	10577001	●	●	●	●	●	●
	7*	CLAQ		-	3,9x25	34/32	-	-	12	2	10577002	●	●	●	●	●	●
	8/135	CLAQ		35-45	3,9x25	34	-	-	12	2	10577003	●	●	●	●	●	●
	7/135	CLAQ		35-45	3,9x25	34	-	-	12	2	10577004	●	●	●	●	●	●
	8/135	CLAQ		35-45	3,9x25	34/32	-	-	12	2	10577007	123,55	182,00	195,48	195,48	292,12	195,48
	7/135	CLAQ		35-45	3,9x25	34/32	-	-	12	2	10577008	123,55	182,00	195,48	195,48	292,12	195,48
	8/135	CLAQ		35-65	3,9x25	34/32	-	-	12	2	10577005	●	●	●	●	●	●
	7/135	CLAQ		35-65	3,9x25	34/32	-	-	12	2	10577006	●	●	●	●	●	●
	8/160	CLAQ		60-90	3,9x25	34/32	-	-	12	2	10577009	●	●	●	●	●	●
	7/160	CLAQ		60-90	3,9x25	34/32	-	-	12	2	10577010	●	●	●	●	●	●
	(8)/135	-		35-45	3,9x25	34/32	-	-	4	6	05112197	●	●	●	●	●	●
	(7)/135	-		35-45	3,9x25	34/32	-	-	4	6	05112198	●	●	●	●	●	●
	(6)/135	-		35-45	3,9x25	34/32	-	-	4	6	05112199	●	●	●	●	●	●
	(5)/135	-		35-45	3,9x25	34/32	-	-	4	6	05112257	●	●	●	●	●	●
	(4)/135	-		35-45	3,9x25	34/32	-	-	4	6	05112200	●	●	●	●	●	●
	8/135	CLAQ		35-45	3,9x25	34	-	-	12	1	19477001	●	●	●	●	●	●
	7/135	CLAQ		35-45	3,9x25	34	-	-	12	1	19477002	●	●	●	●	●	●
	8/155	CLAQ		50-55	3,9x25	34	-	-	12	1	19477003	●	●	●	●	●	●
	7/155	CLAQ		50-55	3,9x25	34	-	-	12	1	19477004	●	●	●	●	●	●
	8/165	CLAQ		60-75	3,9x25	34	-	-	12	1	19477005	●	●	●	●	●	●
	7/165	CLAQ		60-75	3,9x25	34	-	-	12	1	19477006	●	●	●	●	●	●
	8/175	CLAQ		75-90	3,9x25	34	-	-	12	1	19477007	●	●	●	●	●	●
	7/175	CLAQ		75-90	3,9x25	34	-	-	12	1	19477008	●	●	●	●	●	●

Descrizione_Description **1/2 ferro ancora**_1/2 anchor spindle

STEEL

Supporto_Support -

												MECHANISM 26
8/60	CLAC	-	-	-	-	-	-	10	8	06727462		●
8/70	CLAC	-	-	-	-	-	-	10	8	06727427		●
8/80	CLAC	-	-	-	-	-	-	10	8	06727428		●
8/90	CLAC	-	-	-	-	-	-	10	8	06727429		●
8/100	CLAC	-	-	-	-	-	-	10	8	06727463		●
7/60	CLAC	-	-	-	-	-	-	10	8	06727432		●
7/70	CLAC	-	-	-	-	-	-	10	8	06727433		●
7/80	CLAC	-	-	-	-	-	-	10	8	06727434		●
7/90	CLAC	-	-	-	-	-	-	10	8	06727435		●
7/100	CLAC	-	-	-	-	-	-	10	8	06727436		●

Descrizione_Description **LOFT** pomolo fisso_fixed knob

ZAMAK for AISI316

Supporto_Support **ø45x8mm**

													PLATINUM PVD 03	PLATINUM ABACO® 62	BLACK PEARL SATIN PVD 9B	COPPER SATIN PVD 1C	NOIR SATIN PVD 2C	NATURAL GOLD SATIN PVD 3C
7* or 8*	CLAC	-	-	3,9x25	34	-	-	12	1	17077001			●	●	●	●	●	●

Descrizione_Description **ROUND** pomolo fisso_fixed knob

AISI316

Supporto_Support **ø45x8mm**

													NATURAL 316 48	PLATINUM ABACO® 62	BLACK PEARL SATIN PVD 9B	COPPER SATIN PVD 1C	NOIR SATIN PVD 2C	NATURAL GOLD SATIN PVD 3C
7* or 8*	CLAC	-	-	3,9x25	34	-	-	12	1	19877001			●	●	●	●	●	●

Descrizione_Description **1/2 ferro per pomolo fisso**_1/2 fixed knob spindle

STEEL

Supporto_Support -

											MECHANISM 26
7/90	CLAC	-	45-55	-	-	-	-	10	8	06727507	●
7/100	CLAC	-	50-65	-	-	-	-	10	8	06727508	●
7/110	CLAC	-	60-75	-	-	-	-	10	8	06727509	●
7/120	CLAC	-	70-85	-	-	-	-	10	8	06727510	●
7/130	CLAC	-	80-95	-	-	-	-	10	8	06727551	●
7/140	CLAC	-	90-105	-	-	-	-	10	8	06727552	●
8/90	CLAC	-	45-55	-	-	-	-	10	8	06727503	●
8/100	CLAC	-	50-65	-	-	-	-	10	8	06727504	●
8/110	CLAC	-	60-75	-	-	-	-	10	8	06727505	●
8/120	CLAC	-	70-85	-	-	-	-	10	8	06727506	●
8/130	CLAC	-	80-95	-	-	-	-	10	8	06727549	●
8/140	CLAC	-	90-105	-	-	-	-	10	8	06727550	●

DRITTA

design Leo De Carlo

BRASS ZAMAK ALU **AISI 316** AISI 304

MANIGLIA PER PORTE INTERNE – SUPPORTO EASYPIN ø55x2mm INTERNAL DOORS HANDLE – SUPPORT EASYPIN ø55x2mm

CARATTERISTICHE FEATURES	**FISSAGGIO** FIXING	**FINITURE** FINISHES	**OPZIONI** OPTIONS

1.500h	500h	500h	500h	500h	500h	500h	EN-179	REI-60	IP-65

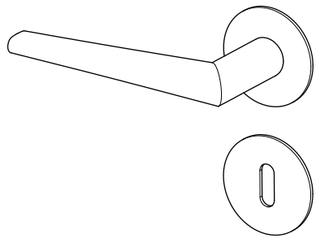

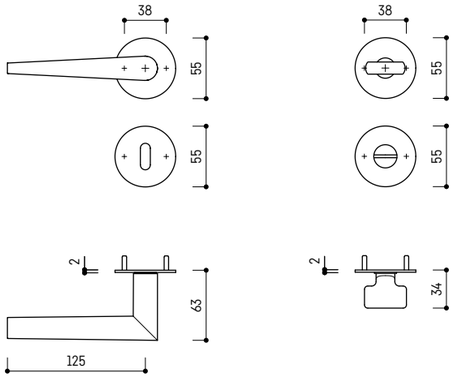

STANDARD TOILET SET

VERSIONI DISPONIBILI AVAILABLE VERSIONS

CAPITOLATO SPECIFICATION

ULTRACYCLE®

ULTRACYCLE® tested for over **1.000.000** cycles - **CLASS 4**

NORMA DIN EN 1906 DIN EN 1906 NORM

4 | 7 | - | 0 | 0 | 4 | 0 | A

Per una descrizione dettagliata di tutte le specifiche tecniche presenti nel prodotto, da impiegare nei capitolati o nelle offerte pubbliche, fate riferimento alla sezione CAPITOLATI for a detailed description of all the technical informations contained in the product, to be used in the specifications or in public tenders, please refer to the SPECIFICATIONS section.

Descrizione Description: **DRITTA** design Leo De Carlo

AISI316

Supporto Support: **EASYPIN ø55x2mm**

■	+			X							NATURAL 316 48	PLATINUM ABACO® 62	BLACK PEARL SATIN 9B	COPPER SATIN 1C	NOIR SATIN 2C	NATURAL GOLD SATIN 3C
8/135	CLAQ		35-45	-	38	Ø7	-	12	2	10559001	●	●	●	●	●	●
7/135	CLAQ		35-45	-	38	Ø7	-	12	2	10559002	●	●	●	●	●	●
-	CLAQ		-	-	38	Ø7	-	24	10	06548077	●	●	●	●	●	●
-	-		-	-	38	Ø7	-	24	10	06525121	●	●	●	●	●	●
-	-		-	-	38	Ø7	-	24	10	06525120	●	●	●	●	●	●
(8)/135	-		35-45	-	38	Ø7	-	4	6	05112251	●	●	●	●	●	●
(7)/135	-		35-45	-	38	Ø7	-	4	6	05112261	●	●	●	●	●	●
(6)/135	-		35-45	-	38	Ø7	-	4	6	05112262	●	●	●	●	●	●
(5)/135	-		35-45	-	38	Ø7	-	4	6	05112263	●	●	●	●	●	●
(4)/135	-		35-45	-	38	Ø7	-	4	6	05112264	●	●	●	●	●	●

SECURITY

design Leo De Carlo

BRASS · ZAMAK · ALU · **AISI 316** · AISI 304

MANIGLIA PER PORTE INTERNE – SUPPORTO ø52x10mm_INTERNAL DOORS HANDLE – SUPPORT ø52x10mm

CARATTERISTICHE_FEATURES	**FISSAGGIO**_FIXING	**FINITURE**_FINISHES								**OPZIONI**_OPTIONS			
		1.500h	500h	500h	500h	500h	500h	500h		EN-179	REI-60	IP-65

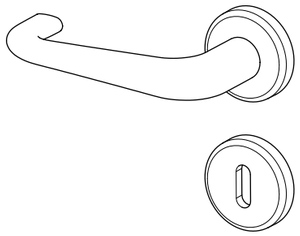

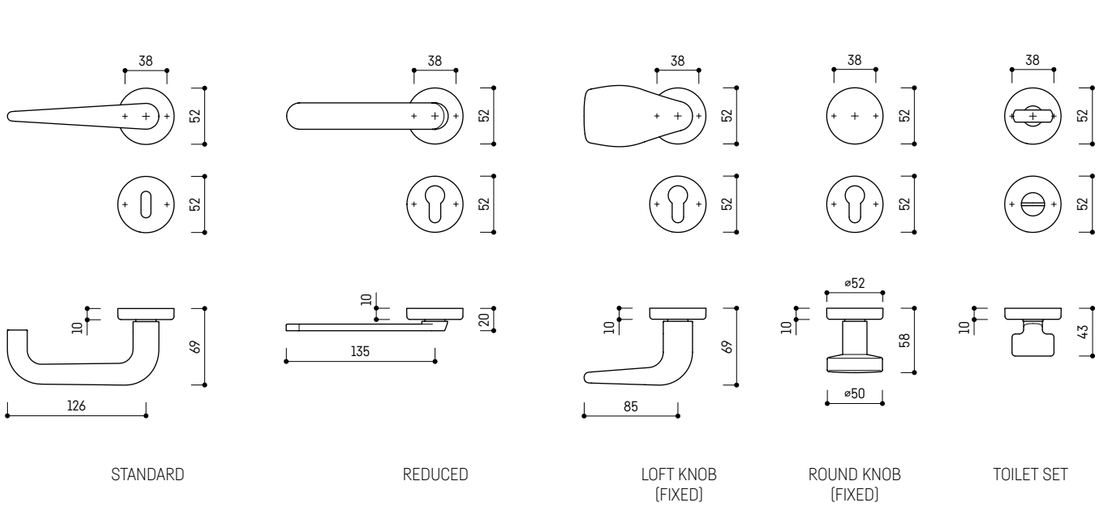

STANDARD · REDUCED · LOFT KNOB (FIXED) · ROUND KNOB (FIXED) · TOILET SET

VERSIONI DISPONIBILI_AVAILABLE VERSIONS

CAPITOLATO_SPECIFICATION

ULTRACYCLE®

ULTRACYCLE® tested for over **1.000.000** cycles - **CLASS 4**

NORMA DIN EN 1906_DIN EN 1906 NORM

4 | 7 | - | 0 | 0 | 4 | 0 | A

Per una descrizione dettagliata di tutte le specifiche tecniche presenti nel prodotto, da impiegare nei capitolati o nelle offerte pubbliche, fate riferimento alla sezione CAPITOLATI_for a detailed description of all the technical informations contained in the product, to be used in the specifications or in public tenders, please refer to the SPECIFICATIONS section.

Descrizione_Description: **SECURITY**_design Leo De Carlo

AISI316

Supporto_Support: **ø52x10mm**

	■	+			X							NATURAL 316 48	PLATINUM ABACO® 62	BLACK PEARL SATIN 9B	COPPER SATIN 1C	NOIR SATIN 2C	NATURAL GOLD SATIN 3C
	8*			-	3,9x25 3,9x50	38	Ø8	-	12	2	10702056	●	●	●	●	●	●
	7*			-	3,9x25 3,9x50	38	Ø8	-	12	2	10702057	●	●	●	●	●	●
	8/135			35-45	3,9x50	38	Ø8	-	12	2	10702058	●	●	●	●	●	●
	8/135			35-45	3,9x25 3,9x50	38	Ø8	-	12	2	10702059	●	●	●	●	●	●
	7/135			35-45	3,9x25 3,9x50	38	Ø8	-	12	2	10702008	●	●	●	●	●	●
	8/135			35-65	3,9x25	38	Ø8	-	12	2	10702060	●	●	●	●	●	●
	7/135			35-65	3,9x25	38	Ø8	-	12	2	10702061	●	●	●	●	●	●
	8/135			35-45	3,9x50	38	Ø8	-	12	2	10702063	●	●	●	●	●	●
	8/135			35-45	3,9x25 3,9x50	38	Ø8	-	12	2	10702065	●	●	●	●	●	●
	7/135			35-45	3,9x25 3,9x50	38	Ø8	-	12	2	10702002	●	●	●	●	●	●
	8/135			35-45	3,9x25	38	-	-	12	2	10702068	●	●	●	●	●	●
	7/135			35-45	3,9x25	38	-	-	12	2	10702069	●	●	●	●	●	●
	8/135			35-45	3,9x50	38	Ø8	-	12	2	10702062	●	●	●	●	●	●
	8/160			60-90	3,9x25 3,9x75 3,9x95	38	Ø8	-	12	2	10702070	●	●	●	●	●	●
	8/135			35-45	3,9x25 3,9x50	38	Ø8	-	12	2	10702064	●	●	●	●	●	●
	8/160			60-90	3,9x25 3,9x75 3,9x95	38	Ø8	-	12	2	10702071	●	●	●	●	●	●
	7/135			35-45	3,9x25 3,9x50	38	Ø8	-	12	2	10702015	●	●	●	●	●	●
	7/160			60-90	3,9x25 3,9x75 3,9x95	38	Ø8	-	12	2	10702072	●	●	●	●	●	●
	8/135			35-65	3,9x25	38	Ø8	-	12	2	10702066	●	●	●	●	●	●
	8/160			60-90	3,9x25	38	Ø8	-	12	2	10702073	●	●	●	●	●	●
	7/135			35-65	3,9x25	38	Ø8	-	12	2	10702067	●	●	●	●	●	●
	7/160			60-90	3,9x25	38	Ø8	-	12	2	10702074	●	●	●	●	●	●
	(8)/135			35-45	3,9x50	38	Ø8	-	4	6	05112122	●	●	●	●	●	●

Descrizione_Description **SECURITY**_design Leo De Carlo

AISI316

Supporto_Support **ø52x10mm**

	■	+										NATURAL 316 48	PLATINUM ABACO® 62	BLACK PEARL SATIN 9B	COPPER SATIN 1C	NOIR SATIN 2C	NATURAL GOLD SATIN 3C
	(8)/135			35-45	3,9x25 3,9x50	38	Ø8	-	4	6	05112110	●	●	●	●	●	●
	(7)/135			35-45	3,9x25 3,9x50	38	Ø8	-	4	6	05112111	●	●	●	●	●	●
	(6)/135			35-45	3,9x25 3,9x50	38	Ø8	-	4	6	05112112	●	●	●	●	●	●
	(5)/135			35-45	3,9x25 3,9x50	38	Ø8	-	4	6	05112254	●	●	●	●	●	●
	(4)/135			35-45	3,9x25 3,9x50	38	Ø8	-	4	6	005112113	●	●	●	●	●	●
	(8)/135			35-45	3,9x50	38	Ø8	-	4	6	05112137	●	●	●	●	●	●
	(8)/135			35-45	3,9x25 3,9x50	38	Ø8	-	4	6	05112125	●	●	●	●	●	●
	(7)/135			35-45	3,9x25 3,9x50	38	Ø8	-	4	6	05112126	●	●	●	●	●	●
	(6)/135			35-45	3,9x25 3,9x50	38	Ø8	-	4	6	05112127	●	●	●	●	●	●
	(5)/135			35-45	3,9x25 3,9x50	38	Ø8	-	4	6	05112265	●	●	●	●	●	●
	(4)/135			35-45	3,9x25 3,9x50	38	Ø8	-	4	6	05112128	●	●	●	●	●	●
	8/135			35-45	3,9x25 3,9x50	38	Ø8	-	12	1	19402005	●	●	●	●	●	●
	7/135			35-45	3,9x25 3,9x50	38	Ø8	-	12	1	19402006	●	●	●	●	●	●
	8/155			50-55	3,9x25 3,9x70	38	Ø8	-	12	1	19402007	●	●	●	●	●	●
	7/155			50-55	3,9x25 3,9x70	38	Ø8	-	12	1	19402008	●	●	●	●	●	●
	8/165			60-75	3,9x25 3,9x65 3,9x75 3,9x95	38	Ø8	-	12	1	19402009	●	●	●	●	●	●
	7/165			60-75	3,9x25 3,9x65 3,9x75 3,9x95	38	Ø8	-	12	1	19402010	●	●	●	●	●	●
	8/175			75-90	3,9x25 3,9x65 3,9x75 3,9x95	38	Ø8	-	12	1	19402011	●	●	●	●	●	●
	7/175			75-90	3,9x25 3,9x65 3,9x75 3,9x95	38	Ø8	-	12	1	19402012	●	●	●	●	●	●

Descrizione_Description **1/2 ferro ancora**_1/2 anchor spindle

STEEL

Supporto_Support -

	■	+										MECHANISM 26
	8/60		-	-	-	-	-	-	10	8	06727462	●
	8/70		-	-	-	-	-	-	10	8	06727427	●
	8/80		-	-	-	-	-	-	10	8	06727428	●
	8/90		-	-	-	-	-	-	10	8	06727429	●
	8/100		-	-	-	-	-	-	10	8	06727463	●
	7/60		-	-	-	-	-	-	10	8	06727432	●
	7/70		-	-	-	-	-	-	10	8	06727433	●
	7/80		-	-	-	-	-	-	10	8	06727434	●
	7/90		-	-	-	-	-	-	10	8	06727435	●
	7/100		-	-	-	-	-	-	10	8	06727436	●

Descrizione_Description **LOFT** pomolo fisso_fixed knob

ZAMAK for AISI316

Supporto_Support **ø52x10mm**

	■	+										PLATINUM PVD 03	PLATINUM ABACO® 62	BLACK PEARL SATIN 9B	COPPER SATIN 1C	NOIR SATIN 2C	NATURAL GOLD SATIN 3C
	7* or 8*			-	3,9x25 3,9x50	38	Ø8	-	12	1	17002001	●	●	●	●	●	●

Descrizione_Description **ROUND** pomolo fisso_fixed knob

AISI316

Supporto_Support **ø52x10mm**

	■	+										NATURAL 316 48	PLATINUM ABACO® 62	BLACK PEARL SATIN 9B	COPPER SATIN 1C	NOIR SATIN 2C	NATURAL GOLD SATIN 3C
	7* or 8*			-	3,9x25 3,9x50	38	Ø8	-	12	1	19802001	●	●	●	●	●	●

Descrizione_Description | **1/2 ferro per pomolo fisso**_1/2 fixed knob spindle

STEEL

Supporto_Support | -

											MECHANISM 26
7/90	CLAC	-	45-55	-	-	-	-	10	8	06727507	●
7/100	CLAC	-	50-65	-	-	-	-	10	8	06727508	●
7/110	CLAC	-	60-75	-	-	-	-	10	8	06727509	●
7/120	CLAC	-	70-85	-	-	-	-	10	8	06727510	●
7/130	CLAC	-	80-95	-	-	-	-	10	8	06727551	●
7/140	CLAC	-	90-105	-	-	-	-	10	8	06727552	●
8/90	CLAC	-	45-55	-	-	-	-	10	8	06727503	●
8/100	CLAC	-	50-65	-	-	-	-	10	8	06727504	●
8/110	CLAC	-	60-75	-	-	-	-	10	8	06727505	●
8/120	CLAC	-	70-85	-	-	-	-	10	8	06727506	●
8/130	CLAC	-	80-95	-	-	-	-	10	8	06727549	●
8/140	CLAC	-	90-105	-	-	-	-	10	8	06727550	●

SECURITY

design Leo De Carlo

BRASS | ZAMAK | ALU | **AISI 316** | AISI 304

MANIGLIA PER PORTE INTERNE – SUPPORTO ø45x8mm_INTERNAL DOORS HANDLE – SUPPORT ø45x8mm

CARATTERISTICHE_FEATURES	**FISSAGGIO**_FIXING	**FINITURE**_FINISHES								**OPZIONI**_OPTIONS			
		1.500h	500h	500h	500h	500h	500h	500h			EN-179	REI-60	IP-65

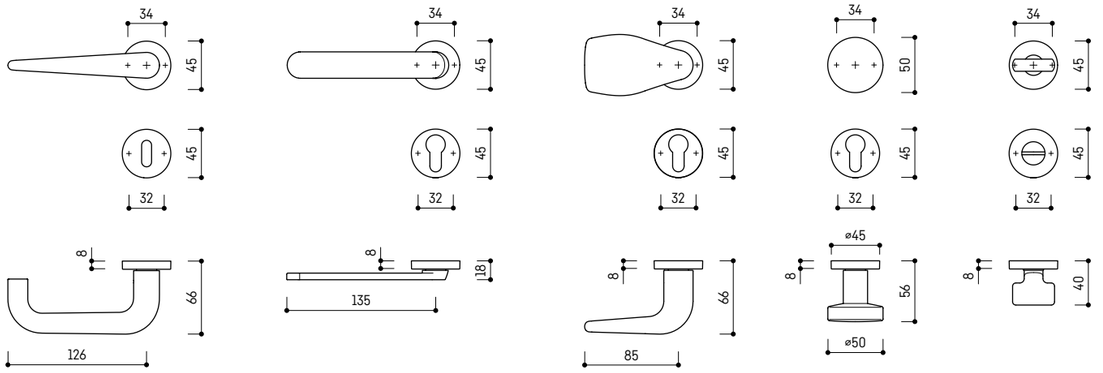

STANDARD | REDUCED | LOFT KNOB (FIXED) | ROUND KNOB (FIXED) | TOILET SET

VERSIONI DISPONIBILI_AVAILABLE VERSIONS

CAPITOLATO_SPECIFICATION

ULTRACYCLE®

ULTRACYCLE® tested for over **1.000.000** cycles - **CLASS 4**

NORMA DIN EN 1906_DIN EN 1906 NORM

4 | 7 | - | 0 | 0 | 4 | 0 | A

Per una descrizione dettagliata di tutte le specifiche tecniche presenti nel prodotto, da impiegare nei capitolati o nelle offerte pubbliche, fate riferimento alla sezione CAPITOLATI_for a detailed description of all the technical informations contained in the product, to be used in the specifications or in public tenders, please refer to the SPECIFICATIONS section.

Descrizione_Description **SECURITY**_design Leo De Carlo

AISI316

Supporto_Support **ø45X8mm**

													NATURAL 316 48	PLATINUM ABACO® 62	BLACK PEARL SATIN 9B	COPPER SATIN 1C	NOIR SATIN 2C	NATURAL GOLD SATIN 3C
	8*	CLIAC		-	3,9x25	34/32	-	-	12	2	10777001	●	●	●	●	●	●
	7*	CLIAC		-	3,9x25	34/32	-	-	12	2	10777002	●	●	●	●	●	●
	8/135	CLIAC		35-45	3,9x25	34	-	-	12	2	10777003	●	●	●	●	●	●
	7/135	CLIAC		35-45	3,9x25	34	-	-	12	2	10777004	●	●	●	●	●	●
	8/135	CLIAC		35-45	3,9x25	34/32	-	-	12	2	10777007	●	●	●	●	●	●
	7/135	CLIAC		35-45	3,9x25	34/32	-	-	12	2	10777008	●	●	●	●	●	●
	8/135	CLIAC		35-65	3,9x25	34/32	-	-	12	2	10777005	●	●	●	●	●	●
	7/135	CLIAC		35-65	3,9x25	34/32	-	-	12	2	10777006	●	●	●	●	●	●
	8/160	CLIAC		60-90	3,9x25	34/32	-	-	12	2	10777009	●	●	●	●	●	●
	7/160	CLIAC		60-90	3,9x25	34/32	-	-	12	2	10777010	●	●	●	●	●	●
	(8)/135	-		35-45	3,9x25	34/32	-	-	4	6	05112197	●	●	●	●	●	●
	(7)/135	-		35-45	3,9x25	34/32	-	-	4	6	05112198	●	●	●	●	●	●
	(6)/135	-		35-45	3,9x25	34/32	-	-	4	6	05112199	●	●	●	●	●	●
	(5)/135	-		35-45	3,9x25	34/32	-	-	4	6	05112257	●	●	●	●	●	●
	(4)/135	-		35-45	3,9x25	34/32	-	-	4	6	05112200	●	●	●	●	●	●
	8/135	CLIAC		35-45	3,9x25	34	-	-	12	1	19477001	●	●	●	●	●	●
	7/135	CLIAC		35-45	3,9x25	34	-	-	12	1	19477002	●	●	●	●	●	●
	8/155	CLIAC		50-55	3,9x25	34	-	-	12	1	19477003	●	●	●	●	●	●
	7/155	CLIAC		50-55	3,9x25	34	-	-	12	1	19477004	●	●	●	●	●	●
	8/165	CLIAC		60-75	3,9x25	34	-	-	12	1	19477005	●	●	●	●	●	●
	7/165	CLIAC		60-75	3,9x25	34	-	-	12	1	19477006	●	●	●	●	●	●
	8/175	CLIAC		75-90	3,9x25	34	-	-	12	1	19477007	●	●	●	●	●	●
	7/175	CLIAC		75-90	3,9x25	34	-	-	12	1	19477008	●	●	●	●	●	●

Descrizione_Description **1/2 ferro ancora**_1/2 anchor spindle

STEEL

Supporto_Support -

												MECHANISM 26
	8/60	CLIAC	-	-	-	-	-	-	10	8	06727462	●
	8/70	CLIAC	-	-	-	-	-	-	10	8	06727427	●
	8/80	CLIAC	-	-	-	-	-	-	10	8	06727428	●
	8/90	CLIAC	-	-	-	-	-	-	10	8	06727429	●
	8/100	CLIAC	-	-	-	-	-	-	10	8	06727463	●
	7/60	CLIAC	-	-	-	-	-	-	10	8	06727432	●
	7/70	CLIAC	-	-	-	-	-	-	10	8	06727433	●
	7/80	CLIAC	-	-	-	-	-	-	10	8	06727434	●
	7/90	CLIAC	-	-	-	-	-	-	10	8	06727435	●
	7/100	CLIAC	-	-	-	-	-	-	10	8	06727436	●

Descrizione_Description **LOFT** pomolo fisso_fixed knob

ZAMAK for AISI316

Supporto_Support **ø45x8mm**

													PLATINUM 03	PLATINUM ABACO® 62	BLACK PEARL SATIN 9B	COPPER SATIN 1C	NOIR SATIN 2C	NATURAL GOLD SATIN 3C
	7* or 8*	CLIAC		-	3,9x25	34	-	-	12	1	17077001	●	●	●	●	●	●	●

Descrizione_Description **ROUND** pomolo fisso_fixed knob

AISI316

Supporto_Support **ø45x8mm**

													NATURAL 316 48	PLATINUM ABACO® 62	BLACK PEARL SATIN 9B	COPPER SATIN 1C	NOIR SATIN 2C	NATURAL GOLD SATIN 3C
	7* or 8*	CLIAC		-	3,9x25	34	-	-	12	1	19877001	●	●	●	●	●	●	●

Descrizione_Description | **1/2 ferro per pomolo fisso**_1/2 fixed knob spindle

STEEL

Supporto_Support | -

											MECHANISM 26
7/90	CLAQ	-	45-55	-	-	-	-	10	8	06727507	●
7/100	CLAQ	-	50-65	-	-	-	-	10	8	06727508	●
7/110	CLAQ	-	60-75	-	-	-	-	10	8	06727509	●
7/120	CLAQ	-	70-85	-	-	-	-	10	8	06727510	●
7/130	CLAQ	-	80-95	-	-	-	-	10	8	06727551	●
7/140	CLAQ	-	90-105	-	-	-	-	10	8	06727552	●
8/90	CLAQ	-	45-55	-	-	-	-	10	8	06727503	●
8/100	CLAQ	-	50-65	-	-	-	-	10	8	06727504	●
8/110	CLAQ	-	60-75	-	-	-	-	10	8	06727505	●
8/120	CLAQ	-	70-85	-	-	-	-	10	8	06727506	●
8/130	CLAQ	-	80-95	-	-	-	-	10	8	06727549	●
8/140	CLAQ	-	90-105	-	-	-	-	10	8	06727550	●

SECURITY

design Leo De Carlo

CE

BRASS | ZAMAK | ALU | **AISI 316** | AISI 304

MANIGLIA PER PORTE INTERNE – SUPPORTO EASYPIN ø55x2mm_INTERNAL DOORS HANDLE – SUPPORT EASYPIN ø55x2mm

CARATTERISTICHE_FEATURES	**FISSAGGIO**_FIXING	**FINITURE**_FINISHES								**OPZIONI**_OPTIONS			
		P	304	316			PVD						
		1.500h	500h	500h	500h	500h	500h	500h			EN-179	REI-60	IP-65

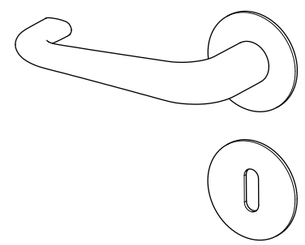

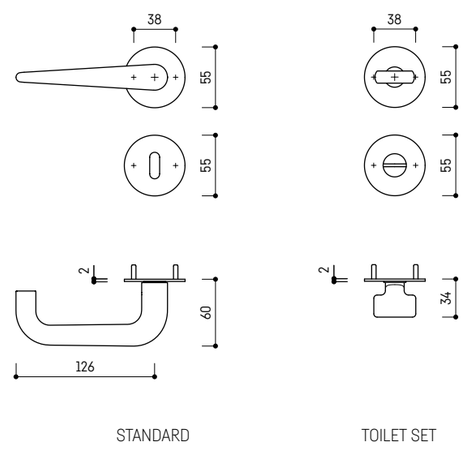

STANDARD TOILET SET

VERSIONI DISPONIBILI_AVAILABLE VERSIONS

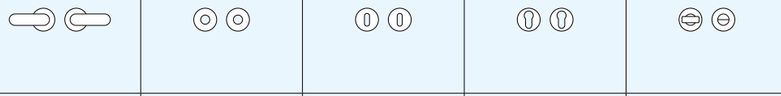

CAPITOLATO_SPECIFICATION

ULTRACYCLE®

ULTRACYCLE® tested for over **1.000.000** cycles - **CLASS 4**

NORMA DIN EN 1906_DIN EN 1906 NORM

4 | 7 | - | 0 | 0 | 4 | 0 | A

Per una descrizione dettagliata di tutte le specifiche tecniche presenti nel prodotto, da impiegare nei capitolati o nelle offerte pubbliche, fate riferimento alla sezione CAPITOLATI_for a detailed description of all the technical informations contained in the product, to be used in the specifications or in public tenders, please refer to the SPECIFICATIONS section.

Descrizione_Description | **SECURITY**_design Leo De Carlo

AISI316

Supporto_Support | ø55x2mm

■	+										MATURAL 316 48	PLATINUM ABACO® 62	BLACK PEARL SATIN 9B	COPPER SATIN 1C	NOIR SATIN 2C	NATURAL GOLD SATIN 3C
8/135	CLAO		35-45	-	38	Ø7	-	12	2	10759001	●	●	●	●	●	●
7/135	CLAO		35-45	-	38	Ø7	-	12	2	10759002	●	●	●	●	●	●
-	CLAO		-	-	38	Ø7	-	24	10	06548077	●	●	●	●	●	●
-	-		-	-	38	Ø7	-	24	10	06525121	●	●	●	●	●	●
-	-		-	-	38	Ø7	-	24	10	06525120	●	●	●	●	●	●
(8)/135	-		35-45	-	38	Ø7	-	4	6	05112251	●	●	●	●	●	●
(7)/135	-		35-45	-	38	Ø7	-	4	6	05112261	●	●	●	●	●	●
(6)/135	-		35-45	-	38	Ø7	-	4	6	05112262	●	●	●	●	●	●
(5)/135	-		35-45	-	38	Ø7	-	4	6	05112263	●	●	●	●	●	●
(4)/135	-		35-45	-	38	Ø7	-	4	6	05112264	●	●	●	●	●	●

SCUDO

design Leo De Carlo

CE

BRASS | ZAMAK | ALU | **AISI 316** | AISI 304

MANIGLIA PER PORTE INTERNE – SUPPORTO 55x55x12mm_INTERNAL DOORS HANDLE – SUPPORT 55x55x12mm

CARATTERISTICHE_FEATURES	**FISSAGGIO**_FIXING	**FINITURE**_FINISHES								**OPZIONI**_OPTIONS			
		1.500h	500h	500h	500h	500h	500h				EN-179	REI-60	IP-65

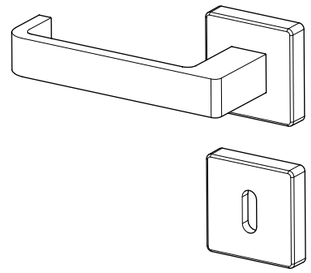

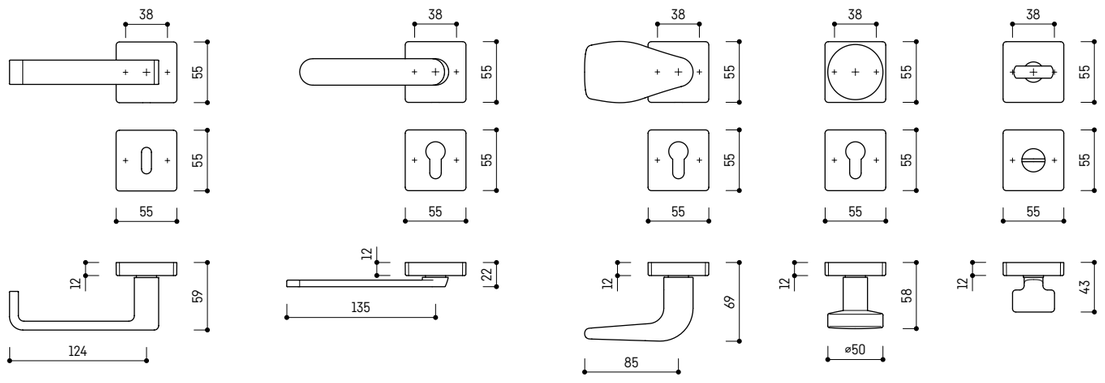

STANDARD | REDUCED | LOFT KNOB (FIXED) | ROUND KNOB (FIXED) | TOILET SET

VERSIONI DISPONIBILI_AVAILABLE VERSIONS

CAPITOLATO_SPECIFICATION

ULTRACYCLE®

ULTRACYCLE® tested for over **1.000.000** cycles - **CLASS 4**

NORMA DIN EN 1906_DIN EN 1906 NORM

4 | 7 | - | 0 | 0 | 4 | 0 | A

Per una descrizione dettagliata di tutte le specifiche tecniche presenti nel prodotto, da impiegare nei capitolati o nelle offerte pubbliche, fate riferimento alla sezione CAPITOLATI_for a detailed description of all the technical informations contained in the product, to be used in the specifications or in public tenders, please refer to the SPECIFICATIONS section.

Descrizione_Description SCUDO_design Leo De Carlo

AISI316

Supporto_Support 55x55x12mm

	■	+										NATURAL 316 48	PLATINUM ABACO® 62	BLACK PEARL SATIN 9B	COPPER SATIN 1C	NOIR SATIN 2C	NATURAL GOLD SATIN 3C
	8*			-	3,9x25 3,9x50	38	Ø8	-	12	2	10697001	●	●	●	●	●	-
	7*			-	3,9x25 3,9x50	38	Ø8	-	12	2	10697002	●	●	●	●	●	-
	8/135			35-45	3,9x50	38	Ø8	-	12	2	10697003	●	●	●	●	●	-
	8/135			35-45	3,9x25 3,9x50	38	Ø8	-	12	2	10697004	●	●	●	●	●	-
	7/135			35-45	3,9x25 3,9x50	38	Ø8	-	12	2	10697005	●	●	●	●	●	-
	8/135			35-65	3,9x25	38	Ø8	-	12	2	10697006	●	●	●	●	●	-
	7/135			35-65	3,9x25	38	Ø8	-	12	2	10697007	●	●	●	●	●	-
	8/135			35-45	3,9x50	38	Ø8	-	12	2	10697009	●	●	●	●	●	-
	8/135			35-45	3,9x25 3,9x50	38	Ø8	-	12	2	10697012	●	●	●	●	●	-
	7/135			35-45	3,9x25 3,9x50	38	Ø8	-	12	2	10697013	●	●	●	●	●	-
	8/135			35-45	3,9x25	38	-	-	12	2	10697016	●	●	●	●	●	-
	7/135			35-45	3,9x25	38	-	-	12	2	10697017	●	●	●	●	●	-
	8/135			35-45	3,9x50	38	Ø8	-	12	2	10697008	●	●	●	●	●	-
	8/160			60-90	3,9x25 3,9x75 3,9x95	38	Ø8	-	12	2	10697018	●	●	●	●	●	-
	8/135			35-45	3,9x25 3,9x50	38	Ø8	-	12	2	10697010	●	●	●	●	●	-
	8/160			60-90	3,9x25 3,9x75 3,9x95	38	Ø8	-	12	2	10697019	●	●	●	●	●	-
	7/135			35-45	3,9x25 3,9x50	38	Ø8	-	12	2	10697011	●	●	●	●	●	-
	7/160			60-90	3,9x25 3,9x75 3,9x95	38	Ø8	-	12	2	10697020	●	●	●	●	●	-
	8/135			35-65	3,9x25	38	Ø8	-	12	2	10697014	●	●	●	●	●	-
	8/160			60-90	3,9x25	38	Ø8	-	12	2	10697021	●	●	●	●	●	-
	7/135			35-65	3,9x25	38	Ø8	-	12	2	10697015	●	●	●	●	●	-
	7/160			60-90	3,9x25	38	Ø8	-	12	2	10697022	●	●	●	●	●	-
	(8)/135			35-45	3,9x50	38	Ø8	-	4	6	05112182	●	●	●	●	●	-

Descrizione_Description SCUDO_design Leo De Carlo

AISI316

Supporto_Support 55x55x12mm

	■	+										NATURAL 316 48	PLATINUM ABACO® 62	BLACK PEARL SATIN 9B	COPPER SATIN 1C	NOIR SATIN 2C	NATURAL GOLD SATIN 3C
	(8)/135			35-45	3,9x25 3,9x50	38	Ø8	-	4	6	05112170	●	●	●	●	●	-
	(7)/135			35-45	3,9x25 3,9x50	38	Ø8	-	4	6	05112171	●	●	●	●	●	-
	(6)/135			35-45	3,9x25 3,9x50	38	Ø8	-	4	6	05112172	●	●	●	●	●	-
	(5)/135			35-45	3,9x25 3,9x50	38	Ø8	-	4	6	05112273	●	●	●	●	●	-
	(4)/135			35-45	3,9x25 3,9x50	38	Ø8	-	4	6	05112173	●	●	●	●	●	-
	8/135			35-45	3,9x25 3,9x50	38	Ø8	-	12	1	19497001	●	●	●	●	●	-
	7/135			35-45	3,9x25 3,9x50	38	Ø8	-	12	1	19497002	●	●	●	●	●	-
	8/155			50-55	3,9x25 3,9x70	38	Ø8	-	12	1	19497003	●	●	●	●	●	-
	7/155			50-55	3,9x25 3,9x70	38	Ø8	-	12	1	19497004	●	●	●	●	●	-
	8/165			60-75	3,9x25 3,9x65 3,9x75 3,9x95	38	Ø8	-	12	1	19497005	●	●	●	●	●	-
	7/165			60-75	3,9x25 3,9x65 3,9x75 3,9x95	38	Ø8	-	12	1	19497006	●	●	●	●	●	-
	8/175			75-90	3,9x25 3,9x65 3,9x75 3,9x95	38	Ø8	-	12	1	19497007	●	●	●	●	●	-
	7/175			75-90	3,9x25 3,9x65 3,9x75 3,9x95	38	Ø8	-	12	1	19497008	●	●	●	●	●	-

Descrizione_Description **1/2 ferro ancora**_1/2 anchor spindle

STEEL

Supporto_Support -

												MECHANISM 26
8/60	CLAD	-	-	-	-	-	-	10	8	06727462		●
8/70	CLAD	-	-	-	-	-	-	10	8	06727427		●
8/80	CLAD	-	-	-	-	-	-	10	8	06727428		●
8/90	CLAD	-	-	-	-	-	-	10	8	06727429		●
8/100	CLAD	-	-	-	-	-	-	10	8	06727463		●
7/60	CLAD	-	-	-	-	-	-	10	8	06727432		●
7/70	CLAD	-	-	-	-	-	-	10	8	06727433		●
7/80	CLAD	-	-	-	-	-	-	10	8	06727434		●
7/90	CLAD	-	-	-	-	-	-	10	8	06727435		●
7/100	CLAD	-	-	-	-	-	-	10	8	06727436		●

Descrizione_Description **LOFT** pomolo fisso_fixed knob

ZAMAK for AISI316

Supporto_Support **ø52x10mm**

													PLATINUM PVD 03	PLATINUM ABACO® 62	BLACK PEARL SATIN PVD 9B	COPPER SATIN PVD 1C	NOIR SATIN PVD 2C	NATURAL GOLD SATIN PVD 3C
7* or 8*	CLAD		-	3,9x25 3,9x50	38	Ø8	-	12	1	17097001			●	●	●	●	●	●

Descrizione_Description **ROUND** pomolo fisso_fixed knob

AISI316

Supporto_Support **ø52x10mm**

													NATURAL 316 48	PLATINUM ABACO® 62	BLACK PEARL SATIN PVD 9B	COPPER SATIN PVD 1C	NOIR SATIN PVD 2C	NATURAL GOLD SATIN PVD 3C
7* or 8*	CLAD		-	3,9x25 3,9x50	38	Ø8	-	12	1	19897001			●	●	●	●	●	●

Descrizione_Description **1/2 ferro per pomolo fisso**_1/2 fixed knob spindle

STEEL

Supporto_Support -

											MECHANISM 26
7/90	CLAD	-	45-55	-	-	-	-	10	8	06727507	●
7/100	CLAD	-	50-65	-	-	-	-	10	8	06727508	●
7/110	CLAD	-	60-75	-	-	-	-	10	8	06727509	●
7/120	CLAD	-	70-85	-	-	-	-	10	8	06727510	●
7/130	CLAD	-	80-95	-	-	-	-	10	8	06727551	●
7/140	CLAD	-	90-105	-	-	-	-	10	8	06727552	●
8/90	CLAD	-	45-55	-	-	-	-	10	8	06727503	●
8/100	CLAD	-	50-65	-	-	-	-	10	8	06727504	●
8/110	CLAD	-	60-75	-	-	-	-	10	8	06727505	●
8/120	CLAD	-	70-85	-	-	-	-	10	8	06727506	●
8/130	CLAD	-	80-95	-	-	-	-	10	8	06727549	●
8/140	CLAD	-	90-105	-	-	-	-	10	8	06727550	●

SCUDO

design Leo De Carlo

BRASS · ZAMAK · ALU · **AISI 316** · AISI 304

MANIGLIA PER PORTE INTERNE – SUPPORTO EASYPIN 55x55x2mm_INTERNAL DOORS HANDLE – SUPPORT EASYPIN 55x55x2mm

CARATTERISTICHE_FEATURES	**FISSAGGIO**_FIXING	**FINITURE**_FINISHES	**OPZIONI**_OPTIONS
CLAQ · R · molla · EASYPIN	38 · 55 · 55 · 55 · 55 · 55	1.500h · 304 500h · 316 500h · 500h · 500h · PVD 500h · 500h	+ · EN-179 · REI-60 · IP-65

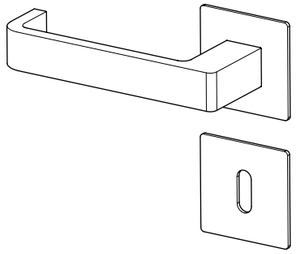

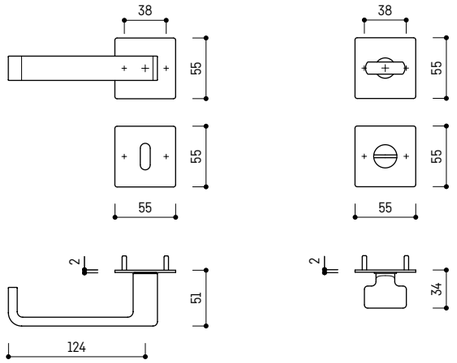

STANDARD TOILET SET

VERSIONI DISPONIBILI_AVAILABLE VERSIONS

CAPITOLATO_SPECIFICATION

ULTRACYCLE®

ULTRACYCLE® tested for over **1.000.000** cycles - **CLASS 4**

NORMA DIN EN 1906_DIN EN 1906 NORM

4 | 7 | - | 0 | 0 | 4 | 0 | A

Per una descrizione dettagliata di tutte le specifiche tecniche presenti nel prodotto, da impiegare nei capitolati o nelle offerte pubbliche, fate riferimento alla sezione CAPITOLATI_for a detailed description of all the technical informations contained in the product, to be used in the specifications or in public tenders, please refer to the SPECIFICATIONS section.

Descrizione_Description: **SCUDO**_design Leo De Carlo

AISI316

Supporto_Support: **EASYPIN 55x55x2mm**

	■	+			X							NATURAL 316 48	PLATINUM ABACO® 62	BLACK PEARL SATIN 9B	COPPER SATIN 1C	NOIR SATIN 2C	NATURAL GOLD SATIN 3C
	8/135	CLAQ		35-45	-	38	Ø7	-	12	2	10661001	●	●	●	●	●	-
	7/135	CLAQ		35-45	-	38	Ø7	-	12	2	10661002	●	●	●	●	●	-
	-	CLAQ		-	-	38	Ø7	-	24	10	06548096	●	●	●	●	●	-
	-	-		-	-	38	Ø7	-	24	10	06525175	●	●	●	●	●	-
	-	-		-	-	38	Ø7	-	24	10	06525174	●	●	●	●	●	-
	(8)/135	-		35-45	-	38	Ø7	-	4	6	05112252	●	●	●	●	●	-
	(7)/135	-		35-45	-	38	Ø7	-	4	6	05112269	●	●	●	●	●	-
	(6)/135	-		35-45	-	38	Ø7	-	4	6	05112270	●	●	●	●	●	-
	(5)/135	-		35-45	-	38	Ø7	-	4	6	05112271	●	●	●	●	●	-
	(4)/135	-		35-45	-	38	Ø7	-	4	6	05112272	●	●	●	●	●	-

LOFT

design Leo De Carlo

CE

BRASS · ZAMAK · ALU · **AISI 316** · AISI 304

MANIGLIA PER PORTE INTERNE – SUPPORTO ø52x10mm_INTERNAL DOORS HANDLE – SUPPORT ø52x10mm

CARATTERISTICHE_FEATURES	**FISSAGGIO**_FIXING	**FINITURE**_FINISHES	**OPZIONI**_OPTIONS
CLIAQ · R · molla ·		1.500h · 304 500h · 316 500h · 500h · 500h · PVD 500h · 500h	EN-179 · REI-60 · IP-65

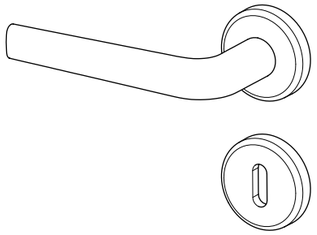

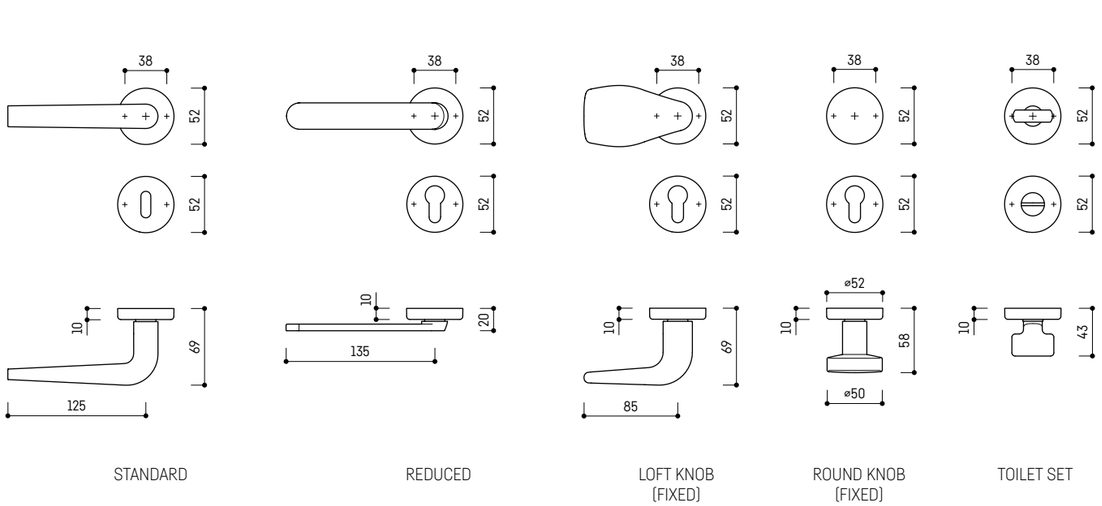

STANDARD · REDUCED · LOFT KNOB (FIXED) · ROUND KNOB (FIXED) · TOILET SET

VERSIONI DISPONIBILI_AVAILABLE VERSIONS	**CAPITOLATO**_SPECIFICATION
maniglia · maniglia · maniglia · maniglia ·	**ULTRACYCLE®** tested for over **1.000.000** cycles - **CLASS 4** **NORMA DIN EN 1906**_DIN EN 1906 NORM 4 | 7 | - | 0 | 0 | 4 | 0 | A
pomolo · pomolo · pomolo ·	**Per una descrizione dettagliata di tutte le specifiche tecniche presenti nel prodotto, da impiegare nei capitolati o nelle offerte pubbliche, fate riferimento alla sezione CAPITOLATI**_for a detailed description of all the technical informations contained in the product, to be used in the specifications or in public tenders, please refer to the SPECIFICATIONS section.

Descrizione_Description: **LOFT**_design Leo De Carlo

Supporto_Support: AISI316 · ø52x10mm

												NATURAL 316 48	PLATINUM ABACO® 62	BLACK PEARL SATIN 9B	COPPER SATIN 1C	NOIR SATIN 2C	NATURAL GOLD SATIN 3C
maniglia	8*	CLIAQ	-	3,9x25 3,9x50	38	Ø8	-	12	2	10802060	●	-	-	-	-	-
maniglia	7*	CLIAQ	-	3,9x25 3,9x50	38	Ø8	-	12	2	10802058	●	-	-	-	-	-
maniglia	8/135	CLIAQ	35-45	3,9x50	38	Ø8	-	12	2	10802065	●	-	-	-	-	-
maniglia	8/135	CLIAQ	35-45	3,9x25 3,9x50	38	Ø8	-	12	2	10802066	●	-	-	-	-	-
maniglia	7/135	CLIAQ	35-45	3,9x25 3,9x50	38	Ø8	-	12	2	10802008	●	-	-	-	-	-
maniglia	8/135	CLIAQ	35-65	3,9x25	38	Ø8	-	12	2	10802064	●	-	-	-	-	-
maniglia	7/135	CLIAQ	35-65	3,9x25	38	Ø8	-	12	2	10802062	●	-	-	-	-	-
maniglia	8/135	CLIAQ	35-45	3,9x50	38	Ø8	-	12	2	10802072	●	-	-	-	-	-
maniglia	8/135	CLIAQ	35-45	3,9x25 3,9x50	38	Ø8	-	12	2	10802076	●	-	-	-	-	-
maniglia	7/135	CLIAQ	35-45	3,9x25 3,9x50	38	Ø8	-	12	2	10802011	●	-	-	-	-	-
maniglia	8/135	CLIAQ	35-45	3,9x25	38	-	-	12	2	10802073	●	-	-	-	-	-
maniglia	7/135	CLIAQ	35-45	3,9x25	38	-	-	12	2	10802074	●	-	-	-	-	-
maniglia	8/135	CLIAQ	35-45	3,9x50	38	Ø8	-	12	2	10802067	●	-	-	-	-	-
maniglia	8/160	CLIAQ	60-90	3,9x25 3,9x75 3,9x95	38	Ø8	-	12	2	10802077	●	-	-	-	-	-
maniglia	8/135	CLIAQ	35-45	3,9x25 3,9x50	38	Ø8	-	12	2	10802071	●	-	-	-	-	-
maniglia	8/160	CLIAQ	60-90	3,9x25 3,9x75 3,9x95	38	Ø8	-	12	2	10802078	●	-	-	-	-	-
maniglia	7/135	CLIAQ	35-45	3,9x25 3,9x50	38	Ø8	-	12	2	10802015	●	-	-	-	-	-
maniglia	7/160	CLIAQ	60-90	3,9x25 3,9x75 3,9x95	38	Ø8	-	12	2	10802079	●	-	-	-	-	-
maniglia	8/135	CLIAQ	35-65	3,9x25	38	Ø8	-	12	2	10802068	●	-	-	-	-	-
maniglia	8/160	CLIAQ	60-90	3,9x25	38	Ø8	-	12	2	10802080	●	-	-	-	-	-
maniglia	7/135	CLIAQ	35-65	3,9x25	38	Ø8	-	12	2	10802070	●	-	-	-	-	-
maniglia	7/160	CLIAQ	60-90	3,9x25	38	Ø8	-	12	2	10802081	●	-	-	-	-	-
pomolo	(8)/135		35-45	3,9x50	38	Ø8	-	4	6	05112122	●	-	-	-	-	-

Descrizione_Description | **LOFT**_design Leo De Carlo

AISI316

Supporto_Support | **ø52x10mm**

											NATURAL 316 48	PLATINUM ABACO® 62	BLACK PEARL SATIN 9B	COPPER SATIN 1C	NOIR SATIN 2C	NATURAL GOLD SATIN 3C
	(8)/135		35-45	3,9x25 3,9x50	38	Ø8	-	4	6	05112110	●	-	-	-	-	-
	(7)/135		35-45	3,9x25 3,9x50	38	Ø8	-	4	6	05112111	●	-	-	-	-	-
	(6)/135		35-45	3,9x25 3,9x50	38	Ø8	-	4	6	05112112	●	-	-	-	-	-
	(5)/135		35-45	3,9x25 3,9x50	38	Ø8	-	4	6	05112254	●	-	-	-	-	-
	(4)/135		35-45	3,9x25 3,9x50	38	Ø8	-	4	6	05112113	●	-	-	-	-	-
	(8)/135			3,9x50	38	Ø8	-	24	1	05112137	●	-	-	-	-	-
	(8)/135		35-45	3,9x25 3,9x50	38	Ø8	-	24	1	05112125	●	-	-	-	-	-
	(7)/135		35-45	3,9x25 3,9x50	38	Ø8	-	24	1	05112126	●	-	-	-	-	-
	(6)/135		35-45	3,9x25 3,9x50	38	Ø8	-	24	1	05112127	●	-	-	-	-	-
	(5)/135		35-45	3,9x25 3,9x50	38	Ø8	-	24	1	05112265	●	-	-	-	-	-
	(4)/135		35-45	3,9x25 3,9x50	38	Ø8	-	24	1	05112128	●	-	-	-	-	-
	8/135		35-45	3,9x25 3,9x50	38	Ø8	-	12	1	19402005	●	-	-	-	-	-
	7/135		35-45	3,9x25 3,9x50	38	Ø8	-	12	1	19402006	●	-	-	-	-	-
	8/155		50-55	3,9x25 3,9x70	38	Ø8	-	12	1	19402007	●	-	-	-	-	-
	7/155		50-55	3,9x25 3,9x70	38	Ø8	-	12	1	19402008	●	-	-	-	-	-
	8/165		60-75	3,9x25 3,9x65 3,9x75 3,9x95	38	Ø8	-	12	1	19402009	●	-	-	-	-	-
	7/165		60-75	3,9x25 3,9x65 3,9x75 3,9x95	38	Ø8	-	12	1	19402010	●	-	-	-	-	-
	8/175		75-90	3,9x25 3,9x65 3,9x75 3,9x95	38	Ø8	-	12	1	19402011	●	-	-	-	-	-
	7/175		75-90	3,9x25 3,9x65 3,9x75 3,9x95	38	Ø8	-	12	1	19402012	●	-	-	-	-	-

Descrizione_Description | **1/2 ferro ancora**_1/2 anchor spindle

STEEL

Supporto_Support | -

										MECHANISM 26
8/60		-	-	-	-	-	-	10	8	06727462	●
8/70		-	-	-	-	-	-	10	8	06727427	●
8/80		-	-	-	-	-	-	10	8	06727428	●
8/90		-	-	-	-	-	-	10	8	06727429	●
8/100		-	-	-	-	-	-	10	8	06727463	●
7/60		-	-	-	-	-	-	10	8	06727432	●
7/70		-	-	-	-	-	-	10	8	06727433	●
7/80		-	-	-	-	-	-	10	8	06727434	●
7/90		-	-	-	-	-	-	10	8	06727435	●
7/100		-	-	-	-	-	-	10	8	06727436	●

Descrizione_Description | **LOFT** pomolo fisso_fixed knob

ZAMAK for AISI316

Supporto_Support | **ø52x10mm**

											PLATINUM 03	PLATINUM ABACO® 62	BLACK PEARL SATIN 9B	COPPER SATIN 1C	NOIR SATIN 2C	NATURAL GOLD SATIN 3C
	7* or 8*			-	3,9x25 3,9x50	38	Ø8	-	12	1	17002001	●	-	-	-	-	-

Descrizione_Description | **ROUND** pomolo fisso_fixed knob

AISI316

Supporto_Support | **ø52x10mm**

											NATURAL 316 48	PLATINUM ABACO® 62	BLACK PEARL SATIN 9B	COPPER SATIN 1C	NOIR SATIN 2C	NATURAL GOLD SATIN 3C
	7* or 8*			-	3,9x25 3,9x50	38	Ø8	-	12	1	19802001	●	-	-	-	-	-

Descrizione_Description | **1/2 ferro per pomolo fisso**_1/2 fixed knob spindle

STEEL

Supporto_Support | -

											MECHANISM 26
7/90	CLAQ	-	45-55	-	-	-	-	10	8	06727507	●
7/100	CLAQ	-	50-65	-	-	-	-	10	8	06727508	●
7/110	CLAQ	-	60-75	-	-	-	-	10	8	06727509	●
7/120	CLAQ	-	70-85	-	-	-	-	10	8	06727510	●
7/130	CLAQ	-	80-95	-	-	-	-	10	8	06727551	●
7/140	CLAQ	-	90-105	-	-	-	-	10	8	06727552	●
8/90	CLAQ	-	45-55	-	-	-	-	10	8	06727503	●
8/100	CLAQ	-	50-65	-	-	-	-	10	8	06727504	●
8/110	CLAQ	-	60-75	-	-	-	-	10	8	06727505	●
8/120	CLAQ	-	70-85	-	-	-	-	10	8	06727506	●
8/130	CLAQ	-	80-95	-	-	-	-	10	8	06727549	●
8/140	CLAQ	-	90-105	-	-	-	-	10	8	06727550	●

LOFT

design Leo De Carlo

BRASS | ZAMAK | ALU | **AISI 316** | AISI 304

MANIGLIA PER PORTE INTERNE – SUPPORTO ø45x8mm_INTERNAL DOORS HANDLE – SUPPORT ø45x8mm

CARATTERISTICHE_FEATURES	**FISSAGGIO**_FIXING	**FINITURE**_FINISHES	**OPZIONI**_OPTIONS
CLAQ, R		P 1.500h; 304 500h; 316 500h; 500h; 500h; PVD 500h; 500h	EN-179

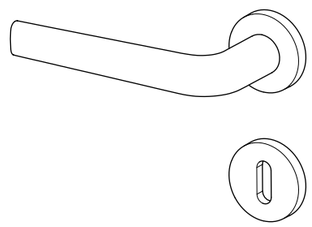

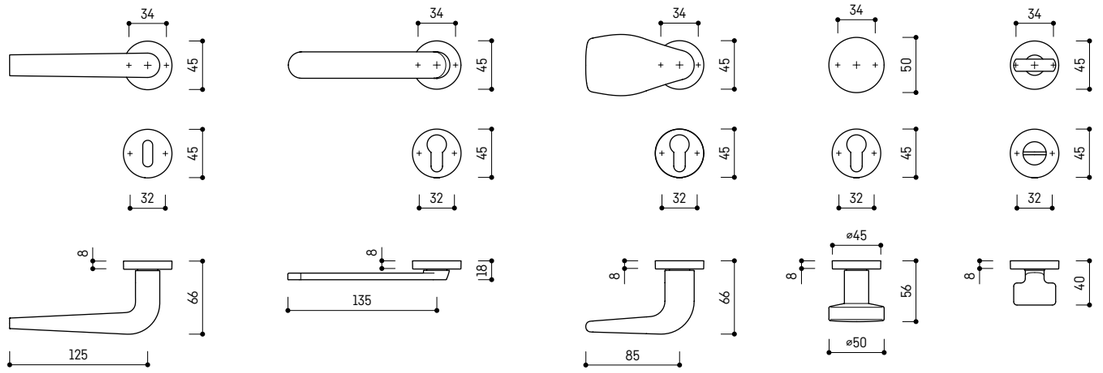

STANDARD | REDUCED | LOFT KNOB (FIXED) | ROUND KNOB (FIXED) | TOILET SET

VERSIONI DISPONIBILI_AVAILABLE VERSIONS

CAPITOLATO_SPECIFICATION

ULTRACYCLE®

ULTRACYCLE® tested for over **1.000.000** cycles - **CLASS 4**

NORMA DIN EN 1906_DIN EN 1906 NORM

4 | 7 | - | 0 | 0 | 4 | 0 | A

Per una descrizione dettagliata di tutte le specifiche tecniche presenti nel prodotto, da impiegare nei capitolati o nelle offerte pubbliche, fate riferimento alla sezione CAPITOLATI_for a detailed description of all the technical informations contained in the product, to be used in the specifications or in public tenders, please refer to the SPECIFICATIONS section.

Descrizione_Description **LOFT**_design Leo De Carlo

AISI316

Supporto_Support **ø45X8mm**

													NATURAL 316 48	PLATINUM ABACO® 62	BLACK PEARL SATIN 9B	COPPER SATIN 1C	NOIR SATIN 2C	NATURAL GOLD SATIN 3C
	8*	CLAC		-	3,9x25	34/32	-	-	12	2	10877001	●	-	-	-	-	-
	7*	CLAC		-	3,9x25	34/32	-	-	12	2	10877002	●	-	-	-	-	-
	8/135	CLAC		35-45	3,9x25	34	-	-	12	2	10877003	●	-	-	-	-	-
	7/135	CLAC		35-45	3,9x25	34	-	-	12	2	10877004	●	-	-	-	-	-
	8/135	CLAC		35-45	3,9x25	34/32	-	-	12	2	10877007	●	-	-	-	-	-
	7/135	CLAC		35-45	3,9x25	34/32	-	-	12	2	10877008	●	-	-	-	-	-
	8/135	CLAC		35-65	3,9x25	34/32	-	-	12	2	10877005	●	-	-	-	-	-
	7/135	CLAC		35-65	3,9x25	34/32	-	-	12	2	10877006	●	-	-	-	-	-
	8/160	CLAC		60-90	3,9x25	34/32	-	-	12	2	10877009	●	-	-	-	-	-
	7/160	CLAC		60-90	3,9x25	34/32	-	-	12	2	10877010	●	-	-	-	-	-
	(8)/135	-		35-45	3,9x25	34/32	-	-	4	6	05112197	●	-	-	-	-	-
	(7)/135	-		35-45	3,9x25	34/32	-	-	4	6	05112198	●	-	-	-	-	-
	(6)/135	-		35-45	3,9x25	34/32	-	-	4	6	05112199	●	-	-	-	-	-
	(5)/135	-		35-45	3,9x25	34/32	-	-	4	6	05112257	●	-	-	-	-	-
	(4)/135	-		35-45	3,9x25	34/32	-	-	4	6	05112200	●	-	-	-	-	-
	8/135	CLAC		35-45	3,9x25	34	-	-	12	1	19477001	●	-	-	-	-	-
	7/135	CLAC		35-45	3,9x25	34	-	-	12	1	19477002	●	-	-	-	-	-
	8/155	CLAC		50-55	3,9x25	34	-	-	12	1	19477003	●	-	-	-	-	-
	7/155	CLAC		50-55	3,9x25	34	-	-	12	1	19477004	●	-	-	-	-	-
	8/165	CLAC		60-75	3,9x25	34	-	-	12	1	19477005	●	-	-	-	-	-
	7/165	CLAC		60-75	3,9x25	34	-	-	12	1	19477006	●	-	-	-	-	-
	8/175	CLAC		75-90	3,9x25	34	-	-	12	1	19477007	●	-	-	-	-	-
	7/175	CLAC		75-90	3,9x25	34	-	-	12	1	19477008	●	-	-	-	-	-

Descrizione_Description **1/2 ferro ancora**_1/2 anchor spindle

STEEL

Supporto_Support -

											MECHANISM 26
8/60	CLAC	-	-	-	-	-	-	10	8	06727462	●
8/70	CLAC	-	-	-	-	-	-	10	8	06727427	●
8/80	CLAC	-	-	-	-	-	-	10	8	06727428	●
8/90	CLAC	-	-	-	-	-	-	10	8	06727429	●
8/100	CLAC	-	-	-	-	-	-	10	8	06727463	●
7/60	CLAC	-	-	-	-	-	-	10	8	06727432	●
7/70	CLAC	-	-	-	-	-	-	10	8	06727433	●
7/80	CLAC	-	-	-	-	-	-	10	8	06727434	●
7/90	CLAC	-	-	-	-	-	-	10	8	06727435	●
7/100	CLAC	-	-	-	-	-	-	10	8	06727436	●

Descrizione_Description **LOFT** pomolo fisso_fixed knob

ZAMAK for AISI316

Supporto_Support **ø45x8mm**

												PLATINUM 03	PLATINUM ABACO® 62	BLACK PEARL SATIN 9B	COPPER SATIN 1C	NOIR SATIN 2C	NATURAL GOLD SATIN 3C
	7* or 8*	CLAC		-	3,9x25	34	-	-	12	1	17077001	●	-	-	-	-	-

Descrizione_Description **ROUND** pomolo fisso_fixed knob

AISI316

Supporto_Support **ø45x8mm**

												NATURAL 316 48	PLATINUM ABACO® 62	BLACK PEARL SATIN 9B	COPPER SATIN 1C	NOIR SATIN 2C	NATURAL GOLD SATIN 3C
	7* or 8*	CLAC		-	3,9x25	34	-	-	12	1	19877001	●	-	-	-	-	-

Descrizione_Description | **1/2 ferro per pomolo fisso**_1/2 fixed knob spindle

STEEL

Supporto_Support | -

											MECHANISM 26
7/90	CLAQ	-	45-55	-	-	-	-	10	8	06727507	●
7/100	CLAQ	-	50-65	-	-	-	-	10	8	06727508	●
7/110	CLAQ	-	60-75	-	-	-	-	10	8	06727509	●
7/120	CLAQ	-	70-85	-	-	-	-	10	8	06727510	●
7/130	CLAQ	-	80-95	-	-	-	-	10	8	06727551	●
7/140	CLAQ	-	90-105	-	-	-	-	10	8	06727552	●
8/90	CLAQ	-	45-55	-	-	-	-	10	8	06727503	●
8/100	CLAQ	-	50-65	-	-	-	-	10	8	06727504	●
8/110	CLAQ	-	60-75	-	-	-	-	10	8	06727505	●
8/120	CLAQ	-	70-85	-	-	-	-	10	8	06727506	●
8/130	CLAQ	-	80-95	-	-	-	-	10	8	06727549	●
8/140	CLAQ	-	90-105	-	-	-	-	10	8	06727550	●

LOFT

design Leo De Carlo

BRASS | ZAMAK | ALU | **AISI 316** | AISI 304

MANIGLIA PER PORTE INTERNE – SUPPORTO EASYPIN ø55x2mm_INTERNAL DOORS HANDLE – SUPPORT EASYPIN ø55x2mm

CARATTERISTICHE_FEATURES	**FISSAGGIO**_FIXING	**FINITURE**_FINISHES	**OPZIONI**_OPTIONS

	CLAQ											P 1.500h	304 500h	316 500h	500h	500h	PVD 500h	500h		EN-179	REI-60	IP-65

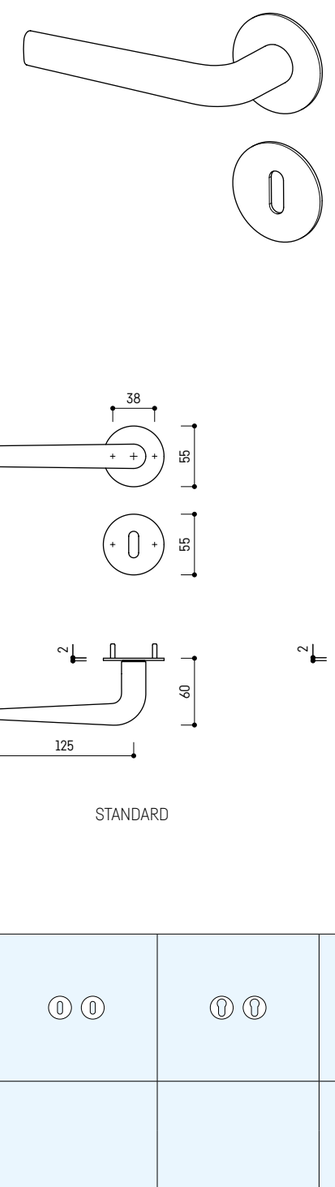

STANDARD TOILET SET

VERSIONI DISPONIBILI_AVAILABLE VERSIONS

CAPITOLATO_SPECIFICATION

ULTRACYCLE®

ULTRACYCLE® tested for over **1.000.000** cycles - **CLASS 4**

NORMA DIN EN 1906_DIN EN 1906 NORM

4 | 7 | - | 0 | 0 | 4 | 0 | A

Per una descrizione dettagliata di tutte le specifiche tecniche presenti nel prodotto, da impiegare nei capitolati o nelle offerte pubbliche, fate riferimento alla sezione CAPITOLATI_for a detailed description of all the technical informations contained in the product, to be used in the specifications or in public tenders, please refer to the SPECIFICATIONS section.

Descrizione_Description | LOFT_design Leo De Carlo

AISI316

Supporto_Support | EASYPIN ø55x2mm

												NATURAL 316 48	PLATINUM ABACO® 62	BLACK PEARL SATIN 9B	COPPER SATIN 1C	NOIR SATIN 2C	NATURAL GOLD SATIN 3C
	8/135	CLAQ		35-45	-	38	Ø7	-	12	2	10859001	●	-	-	-	-	-
	7/135	CLAQ		35-45	-	38	Ø7	-	12	2	10859002	●	-	-	-	-	-
	-	CLAQ		-	-	38	Ø7	-	24	10	06548077	●	-	-	-	-	-
	-	-		-	-	38	Ø7	-	24	10	06525121	●	-	-	-	-	-
	-	-		-	-	38	Ø7	-	24	10	06525120	●	-	-	-	-	-
	(8)/135	-		35-45	-	38	Ø7	-	4	6	05112251	●	-	-	-	-	-
	(7)/135	-		35-45	-	38	Ø7	-	4	6	05112261	●	-	-	-	-	-
	(6)/135	-		35-45	-	38	Ø7	-	4	6	05112262	●	-	-	-	-	-
	(5)/135	-		35-45	-	38	Ø7	-	4	6	05112263	●	-	-	-	-	-
	(4)/135	-		35-45	-	38	Ø7	-	4	6	05112264	●	-	-	-	-	-

RATIO

design Leo De Carlo

BRASS | ZAMAK | ALU | AISI 316 | AISI 304

MANIGLIA PER PORTE INTERNE – SUPPORTO ø52x10mm_INTERNAL DOORS HANDLE – SUPPORT ø52x10mm

CARATTERISTICHE_FEATURES	FISSAGGIO_FIXING	FINITURE_FINISHES	OPZIONI_OPTIONS
CLAQ		1.500h, 500h, 500h, 500h, 500h, 500h	EN-179, REI-60, IP-65

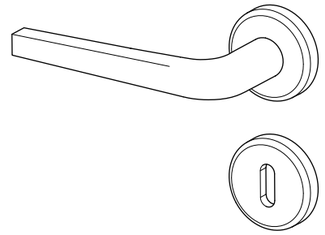

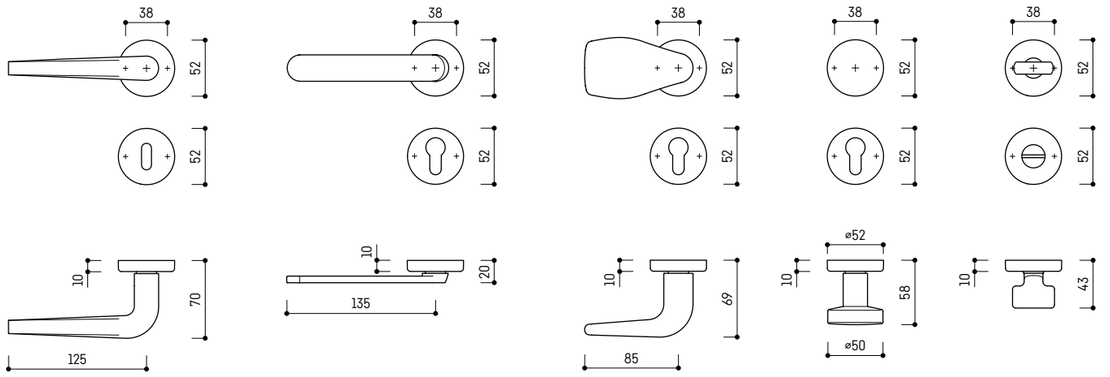

STANDARD | REDUCED | LOFT KNOB (FIXED) | ROUND KNOB (FIXED) | TOILET SET

VERSIONI DISPONIBILI_AVAILABLE VERSIONS

CAPITOLATO_SPECIFICATION

ULTRACYCLE®

ULTRACYCLE® tested for over **1.000.000** cycles - **CLASS 4**

NORMA DIN EN 1906_DIN EN 1906 NORM

4 | 7 | - | 0 | 0 | 4 | 0 | A

Per una descrizione dettagliata di tutte le specifiche tecniche presenti nel prodotto, da impiegare nei capitolati o nelle offerte pubbliche, fate riferimento alla sezione CAPITOLATI_for a detailed description of all the technical informations contained in the product, to be used in the specifications or in public tenders, please refer to the SPECIFICATIONS section.

Descrizione_Description **RATIO**_design Leo De Carlo

AISI316

Supporto_Support **ø52x10mm**

													NATURAL 316 48	PLATINUM ABACO® 62	BLACK PEARL SATIN 9B	COPPER SATIN 1C	NOIR SATIN 2C	NATURAL GOLD SATIN 3C
	8*			-	3,9x25 3,9x50	38	Ø8	-	12	2	10402056		●	-	-	-	-	-
	7*			-	3,9x25 3,9x50	38	Ø8	-	12	2	10402057		●	-	-	-	-	-
	8/135			35-45	3,9x50	38	Ø8	-	12	2	10402058		●	-	-	-	-	-
	8/135			35-45	3,9x25 3,9x50	38	Ø8	-	12	2	10402059		●	-	-	-	-	-
	7/135			35-45	3,9x25 3,9x50	38	Ø8	-	12	2	10402008		●	-	-	-	-	-
	8/135			35-65	3,9x25	38	Ø8	-	12	2	10402060		●	-	-	-	-	-
	7/135			35-65	3,9x25	38	Ø8	-	12	2	10402069		●	-	-	-	-	-
	8/135			35-45	3,9x50	38	Ø8	-	12	2	10402062		●	-	-	-	-	-
	8/135			35-45	3,9x25 3,9x50	38	Ø8	-	12	2	10402064		●	-	-	-	-	-
	7/135			35-45	3,9x25 3,9x50	38	Ø8	-	12	2	10402002		●	-	-	-	-	-
	8/135			35-45	3,9x25	38	-	-	12	2	10402067		●	-	-	-	-	-
	7/135			35-45	3,9x25	38	-	-	12	2	10402068		●	-	-	-	-	-
	8/135			35-45	3,9x50	38	Ø8	-	12	2	10402061		●	-	-	-	-	-
	8/160			60-90	3,9x25 3,9x75 3,9x95	38	Ø8	-	12	2	10402070		●	-	-	-	-	-
	8/135			35-45	3,9x25 3,9x50	38	Ø8	-	12	2	10402063		●	-	-	-	-	-
	8/160			60-90	3,9x25 3,9x75 3,9x95	38	Ø8	-	12	2	10402071		●	-	-	-	-	-
	7/135			35-45	3,9x25 3,9x50	38	Ø8	-	12	2	10402015		●	-	-	-	-	-
	7/160			60-90	3,9x25 3,9x75 3,9x95	38	Ø8	-	12	2	10402072		●	-	-	-	-	-
	8/135			35-65	3,9x25	38	Ø8	-	12	2	10402065		●	-	-	-	-	-
	8/160			60-90	3,9x25	38	Ø8	-	12	2	10402073		●	-	-	-	-	-
	7/135			35-65	3,9x25	38	Ø8	-	12	2	10402066		●	-	-	-	-	-
	7/160			60-90	3,9x25	38	Ø8	-	12	2	10402074		●	-	-	-	-	-
	(8)/135			35-45	3,9x50	38	Ø8	-	4	6	05112122		●	-	-	-	-	-

Descrizione_Description **RATIO**_design Leo De Carlo

AISI316

Supporto_Support **ø52x10mm**

														NATURAL 316 48	PLATINUM ABACO® 62	BLACK PEARL SATIN 9B	COPPER SATIN 1C	NOIR SATIN 2C	NATURAL GOLD SATIN 3C
	(8)/135			35-45	3,9x25 3,9x50	38	Ø8	-	4	6	05112110		●	-	-	-	-	-
	(7)/135			35-45	3,9x25 3,9x50	38	Ø8	-	4	6	05112111		●	-	-	-	-	-
	(6)/135			35-45	3,9x25 3,9x50	38	Ø8	-	4	6	05112112		●	-	-	-	-	-
	(5)/135			35-45	3,9x25 3,9x50	38	Ø8	-	4	6	05112254		●	-	-	-	-	-
	(4)/135			35-45	3,9x25 3,9x50	38	Ø8	-	4	6	005112113		●	-	-	-	-	-
	(8)/135			35-45	3,9x50	38	Ø8	-	4	6	05112137		●	-	-	-	-	-
	(8)/135			35-45	3,9x25 - 3,9x50	38	Ø8	-	4	6	05112125		●	-	-	-	-	-
	(7)/135			35-45	3,9x25 - 3,9x50	38	Ø8	-	4	6	05112126		●	-	-	-	-	-
	(6)/135			35-45	3,9x25 - 3,9x50	38	Ø8	-	4	6	05112127		●	-	-	-	-	-
	(5)/135			35-45	3,9x25 - 3,9x50	38	Ø8	-	4	6	05112265		●	-	-	-	-	-
	(4)/135			35-45	3,9x25 - 3,9x50	38	Ø8	-	4	6	05112128		●	-	-	-	-	-
	8/135			35-45	3,9x25 3,9x50	38	Ø8	-	12	1	19402005		●	-	-	-	-	-
	7/135			35-45	3,9x25 3,9x50	38	Ø8	-	12	1	19402006		●	-	-	-	-	-
	8/155			50-55	3,9x25 3,9x70	38	Ø8	-	12	1	19402007		●	-	-	-	-	-
	7/155			50-55	3,9x25 3,9x70	38	Ø8	-	12	1	19402008		●	-	-	-	-	-
	8/165			60-75	3,9x25 3,9x65 3,9x75 3,9x95	38	Ø8	-	12	1	19402009		●	-	-	-	-	-
	7/165			60-75	3,9x25 3,9x65 3,9x75 3,9x95	38	Ø8	-	12	1	19402010		●	-	-	-	-	-
	8/175			75-90	3,9x25 3,9x65 3,9x75 3,9x95	38	Ø8	-	12	1	19402011		●	-	-	-	-	-
	7/175			75-90	3,9x25 3,9x65 3,9x75 3,9x95	38	Ø8	-	12	1	19402012		●	-	-	-	-	-

Descrizione_Description **1/2 ferro ancora**_1/2 anchor spindle

STEEL

Supporto_Support -

■	+										MECHANISM 26
8/60	CLAD	-	-	-	-	-	-	10	8	06727462	●
8/70	CLAD	-	-	-	-	-	-	10	8	06727427	●
8/80	CLAD	-	-	-	-	-	-	10	8	06727428	●
8/90	CLAD	-	-	-	-	-	-	10	8	06727429	●
8/100	CLAD	-	-	-	-	-	-	10	8	06727463	●
7/60	CLAD	-	-	-	-	-	-	10	8	06727432	●
7/70	CLAD	-	-	-	-	-	-	10	8	06727433	●
7/80	CLAD	-	-	-	-	-	-	10	8	06727434	●
7/90	CLAD	-	-	-	-	-	-	10	8	06727435	●
7/100	CLAD	-	-	-	-	-	-	10	8	06727436	●

Descrizione_Description **LOFT** pomolo fisso_fixed knob

ZAMAK for AISI316

Supporto_Support ø52x10mm

■	+										PLATINUM PVD 03	PLATINUM ABACO® 62	BLACK PEARL SATIN PVD 9B	COPPER SATIN PVD 1C	NOIR SATIN PVD 2C	NATURAL GOLD SATIN PVD 3C
7" or 8"	CLAD	⊖ ⊖	-	3,9x25 3,9x50	38	Ø8	-	12	1	17002001	●	-	-	-	-	-

Descrizione_Description **ROUND** pomolo fisso_fixed knob

AISI316

Supporto_Support ø52x10mm

■	+										NATURAL 316 48	PLATINUM ABACO® 62	BLACK PEARL SATIN PVD 9B	COPPER SATIN PVD 1C	NOIR SATIN PVD 2C	NATURAL GOLD SATIN PVD 3C
7" or 8"	CLAD	⊖ ⊖	-	3,9x25 3,9x50	38	Ø8	-	12	1	19802001	●	-	-	-	-	-

Descrizione_Description **1/2 ferro per pomolo fisso**_1/2 fixed knob spindle

STEEL

Supporto_Support -

■	+										MECHANISM 26
7/90	CLAD	-	45-55	-	-	-	-	10	8	06727507	●
7/100	CLAD	-	50-65	-	-	-	-	10	8	06727508	●
7/110	CLAD	-	60-75	-	-	-	-	10	8	06727509	●
7/120	CLAD	-	70-85	-	-	-	-	10	8	06727510	●
7/130	CLAD	-	80-95	-	-	-	-	10	8	06727551	●
7/140	CLAD	-	90-105	-	-	-	-	10	8	06727552	●
8/90	CLAD	-	45-55	-	-	-	-	10	8	06727503	●
8/100	CLAD	-	50-65	-	-	-	-	10	8	06727504	●
8/110	CLAD	-	60-75	-	-	-	-	10	8	06727505	●
8/120	CLAD	-	70-85	-	-	-	-	10	8	06727506	●
8/130	CLAD	-	80-95	-	-	-	-	10	8	06727549	●
8/140	CLAD	-	90-105	-	-	-	-	10	8	06727550	●

RATIO

design Leo De Carlo

BRASS ZAMAK ALU **AISI 316** AISI 304

MANIGLIA PER PORTE INTERNE – SUPPORTO ø45x8mm_INTERNAL DOORS HANDLE – SUPPORT ø45x8mm

CARATTERISTICHE_FEATURES	FISSAGGIO_FIXING	FINITURE_FINISHES	OPZIONI_OPTIONS
CO, CLAG, R		P 1.500h, 304 500h, 316 500h, 500h, 500h, PVD 500h, 500h	EN-179, REI-60, IP-65

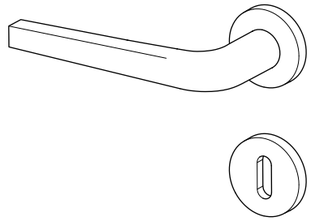

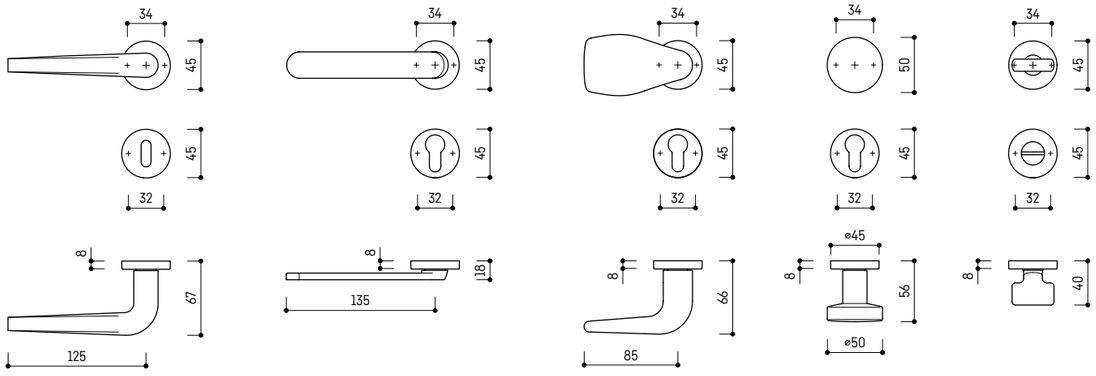

STANDARD | REDUCED | LOFT KNOB (FIXED) | ROUND KNOB (FIXED) | TOILET SET

VERSIONI DISPONIBILI_AVAILABLE VERSIONS

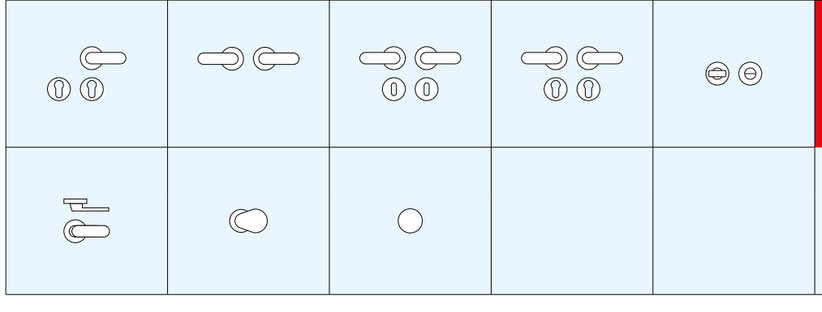

CAPITOLATO_SPECIFICATION

ULTRACYCLE®

ULTRACYCLE® tested for over **1.000.000** cycles - **CLASS 4**

NORMA DIN EN 1906_DIN EN 1906 NORM

4 | 7 | - | 0 | 0 | 4 | 0 | A

Per una descrizione dettagliata di tutte le specifiche tecniche presenti nel prodotto, da impiegare nei capitolati o nelle offerte pubbliche, fate riferimento alla sezione CAPITOLATI_for a detailed description of all the technical informations contained in the product, to be used in the specifications or in public tenders, please refer to the SPECIFICATIONS section.

Descrizione_Description: RATIO_design Leo De Carlo

AISI316

Supporto_Support: ø45X8mm

												NATURAL 316 48	PLATINUM ABACO® 62	BLACK PEARL SATIN PVD 9B	COPPER SATIN PVD 1C	NOIR SATIN PVD 2C	NATURAL GOLD SATIN PVD 3C
	8*	CLAG		-	3,9x25	34/32	-	-	12	2	10477001	●	-	-	-	-	-
	7*	CLAG		-	3,9x25	34/32	-	-	12	2	10477002	●	-	-	-	-	-
	8/135	CLAG		35-45	3,9x25	34	-	-	12	2	10477003	●	-	-	-	-	-
	7/135	CLAG		35-45	3,9x25	34	-	-	12	2	10477004	●	-	-	-	-	-
	8/135	CLAG		35-45	3,9x25	34/32	-	-	12	2	10477007	●	-	-	-	-	-
	7/135	CLAG		35-45	3,9x25	34/32	-	-	12	2	10477008	●	-	-	-	-	-
	8/135	CLAG		35-65	3,9x25	34/32	-	-	12	2	10477005	●	-	-	-	-	-
	7/135	CLAG		35-65	3,9x25	34/32	-	-	12	2	10477006	●	-	-	-	-	-
	8/160	CLAG		60-90	3,9x25	34/32	-	-	12	2	10477009	●	-	-	-	-	-
	7/160	CLAG		60-90	3,9x25	34/32	-	-	12	2	10477010	●	-	-	-	-	-
	(8)/135	-		35-45	3,9x25	34/32	-	-	4	6	05112197	●	-	-	-	-	-
	(7)/135	-		35-45	3,9x25	34/32	-	-	4	6	05112198	●	-	-	-	-	-
	(6)/135	-		35-45	3,9x25	34/32	-	-	4	6	05112199	●	-	-	-	-	-
	(5)/135	-		35-45	3,9x25	34/32	-	-	4	6	05112257	●	-	-	-	-	-
	(4)/135	-		35-45	3,9x25	34/32	-	-	4	6	05112200	●	-	-	-	-	-
	8/135	CLAG		35-45	3,9x25	34	-	-	12	1	19477001	●	-	-	-	-	-
	7/135	CLAG		35-45	3,9x25	34	-	-	12	1	19477002	●	-	-	-	-	-
	8/155	CLAG		50-55	3,9x25	34	-	-	12	1	19477003	●	-	-	-	-	-
	7/155	CLAG		50-55	3,9x25	34	-	-	12	1	19477004	●	-	-	-	-	-
	8/165	CLAG		60-75	3,9x25	34	-	-	12	1	19477005	●	-	-	-	-	-
	7/165	CLAG		60-75	3,9x25	34	-	-	12	1	19477006	●	-	-	-	-	-
	8/175	CLAG		75-90	3,9x25	34	-	-	12	1	19477007	●	-	-	-	-	-
	7/175	CLAG		75-90	3,9x25	34	-	-	12	1	19477008	●	-	-	-	-	-

Descrizione_Description **1/2 ferro ancora**_1/2 anchor spindle

STEEL

Supporto_Support -

												MECHANISM 26
8/60	CLAC	-	-	-	-	-	-	10	8	06727462		●
8/70	CLAC	-	-	-	-	-	-	10	8	06727427		●
8/80	CLAC	-	-	-	-	-	-	10	8	06727428		●
8/90	CLAC	-	-	-	-	-	-	10	8	06727429		●
8/100	CLAC	-	-	-	-	-	-	10	8	06727463		●
7/60	CLAC	-	-	-	-	-	-	10	8	06727432		●
7/70	CLAC	-	-	-	-	-	-	10	8	06727433		●
7/80	CLAC	-	-	-	-	-	-	10	8	06727434		●
7/90	CLAC	-	-	-	-	-	-	10	8	06727435		●
7/100	CLAC	-	-	-	-	-	-	10	8	06727436		●

Descrizione_Description **LOFT** pomolo fisso_fixed knob

ZAMAK for AISI316

Supporto_Support ø45x8mm

												PLATINUM PVD 03	PLATINUM ABACO® 62	BLACK PEARL SATIN PVD 9B	COPPER SATIN PVD 1C	NOIR SATIN PVD 2C	NATURAL GOLD SATIN PVD 3C
7* or 8*	CLAC	-	-	3,9x25	34	-	-	12	1	17077001		●	-	-	-	-	-

Descrizione_Description **ROUND** pomolo fisso_fixed knob

AISI316

Supporto_Support ø45x8mm

												NATURAL 316 48	PLATINUM ABACO® 62	BLACK PEARL SATIN PVD 9B	COPPER SATIN PVD 1C	NOIR SATIN PVD 2C	NATURAL GOLD SATIN PVD 3C
7* or 8*	CLAC	-	-	3,9x25	34	-	-	12	1	19877001		●	-	-	-	-	-

Descrizione_Description **1/2 ferro per pomolo fisso**_1/2 fixed knob spindle

STEEL

Supporto_Support -

												MECHANISM 26
7/90	CLAC	-	45-55	-	-	-	-	10	8	06727507		●
7/100	CLAC	-	50-65	-	-	-	-	10	8	06727508		●
7/110	CLAC	-	60-75	-	-	-	-	10	8	06727509		●
7/120	CLAC	-	70-85	-	-	-	-	10	8	06727510		●
7/130	CLAC	-	80-95	-	-	-	-	10	8	06727551		●
7/140	CLAC	-	90-105	-	-	-	-	10	8	06727552		●
8/90	CLAC	-	45-55	-	-	-	-	10	8	06727503		●
8/100	CLAC	-	50-65	-	-	-	-	10	8	06727504		●
8/110	CLAC	-	60-75	-	-	-	-	10	8	06727505		●
8/120	CLAC	-	70-85	-	-	-	-	10	8	06727506		●
8/130	CLAC	-	80-95	-	-	-	-	10	8	06727549		●
8/140	CLAC	-	90-105	-	-	-	-	10	8	06727550		●

RATIO

design Leo De Carlo

CE

BRASS · ZAMAK · ALU · **AISI 316** · AISI 304

MANIGLIA PER PORTE INTERNE – SUPPORTO _INTERNAL DOORS HANDLE – SUPPORT EASYPIN ø55x2mm

CARATTERISTICHE_FEATURES	**FISSAGGIO**_FIXING	**FINITURE**_FINISHES	**OPZIONI**_OPTIONS
		1.500h · 500h · **500h** · 500h · 500h · 500h · 500h	EN-179

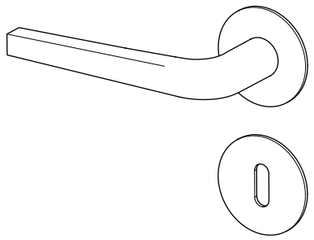

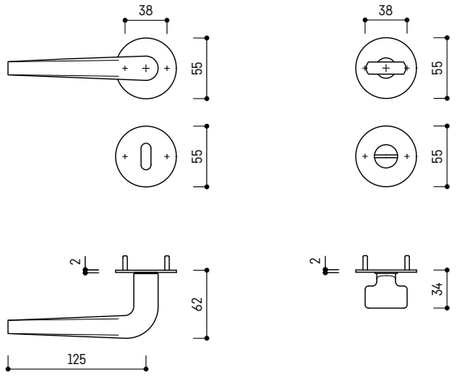

STANDARD TOILET SET

VERSIONI DISPONIBILI_AVAILABLE VERSIONS

CAPITOLATO_SPECIFICATION

ULTRACYCLE® tested for over **1.000.000** cycles - **CLASS 4**

NORMA DIN EN 1906_DIN EN 1906 NORM

4 | 7 | - | 0 | 0 | 4 | 0 | A

Per una descrizione dettagliata di tutte le specifiche tecniche presenti nel prodotto, da impiegare nei capitolati o nelle offerte pubbliche, fate riferimento alla sezione CAPITOLATI_for a detailed description of all the technical informations contained in the product, to be used in the specifications or in public tenders, please refer to the SPECIFICATIONS section.

Descrizione_Description: **RATIO**_design Leo De Carlo

AISI316

Supporto_Support: **EASYPIN ø55x2mm**

												NATURAL 316 48	PLATINUM ABACO® 62	BLACK PEARL SATIN 9B	COPPER SATIN 1C	NOIR SATIN 2C	NATURAL GOLD SATIN 3C
	8/135		35-45	-	38	Ø7	-	12	2	10459001	●	-	-	-	-	-
	7/135		35-45	-	38	Ø7	-	12	2	10459002	●	-	-	-	-	-
	-		-	-	38	Ø7	-	24	10	06548077	●	-	-	-	-	-
	-	-	-	-	38	Ø7	-	24	10	06525121	●	-	-	-	-	-
	-	-	-	-	38	Ø7	-	24	10	06525120	●	-	-	-	-	-
	(8)/135	-	35-45	-	38	Ø7	-	4	6	05112251	●	-	-	-	-	-
	(7)/135	-	35-45	-	38	Ø7	-	4	6	05112261	●	-	-	-	-	-
	(6)/135	-	35-45	-	38	Ø7	-	4	6	05112262	●	-	-	-	-	-
	(5)/135	-	35-45	-	38	Ø7	-	4	6	05112263	●	-	-	-	-	-
	(4)/135	-	35-45	-	38	Ø7	-	4	6	05112264	●	-	-	-	-	-

SALÒ

design Ufficio Tecnico Opentech

BRASS ZAMAK ALU AISI 316 **AISI 304**

MANIGLIA PER PORTE INTERNE – SUPPORTO ø52x10mm_INTERNAL DOORS HANDLE – SUPPORT ø52x10mm

CARATTERISTICHE_FEATURES	**FISSAGGIO**_FIXING	**FINITURE**_FINISHES						**OPZIONI**_OPTIONS			
		1.500h	500h	500h	500h	500h	500h		EN-179	REI-60	IP-65

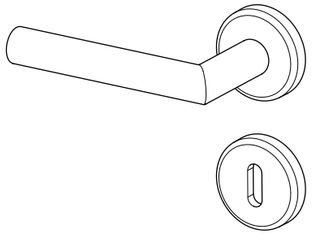

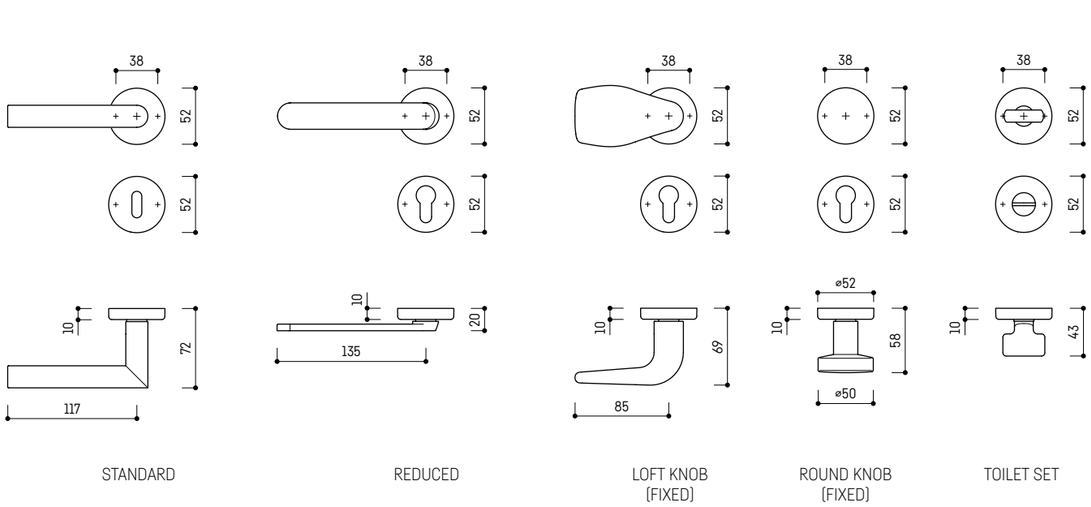

STANDARD REDUCED LOFT KNOB (FIXED) ROUND KNOB (FIXED) TOILET SET

VERSIONI DISPONIBILI_AVAILABLE VERSIONS

CAPITOLATO_SPECIFICATION

ULTRACYCLE®

ULTRACYCLE® tested for over **1.000.000** cycles - **CLASS 4**

NORMA DIN EN 1906_DIN EN 1906 NORM

4 | 7 | - | 0 | 0 | 4 | 0 | A

Per una descrizione dettagliata di tutte le specifiche tecniche presenti nel prodotto, da impiegare nei capitolati o nelle offerte pubbliche, fate riferimento alla sezione CAPITOLATI_for a detailed description of all the technical informations contained in the product, to be used in the specifications or in public tenders, please refer to the SPECIFICATIONS section.

Descrizione_Description SALÒ_ design Ufficio Tecnico Opentech

AISI304

Supporto_Support ø52x10mm

■	+	x	x	x							MATURAL 304 19	PLATINUM ABLOO® 62	BLACK RAL 9005 33	COPPER SATIN PVD 1C	NATURAL GOLD SATIN PVD 3C
8*		-	3,9x25 3,9x50	38	Ø8	-	12	2	12302084	●	●	●	●	●
7*		-	3,9x25 3,9x50	38	Ø8	-	12	2	12302081	●	●	●	●	●
8/135		35-45	3,9x50	38	Ø8	-	12	2	12302088	●	●	●	●	●
8/135		35-45	3,9x25 3,9x50	38	Ø8	-	12	2	12302080	●	●	●	●	●
7/135		35-45	3,9x25 3,9x50	38	Ø8	-	12	2	12302004	●	●	●	●	●
8/135		35-65	3,9x25	38	Ø8	-	12	2	12302090	●	●	●	●	●
7/135		35-65	3,9x25	38	Ø8	-	12	2	12302087	●	●	●	●	●
8/135		35-45	3,9x50	38	Ø8	-	12	2	12302098	47,88	98,32	60,13	75,49	78,49
8/135		35-45	3,9x25 3,9x50	38	Ø8	-	12	2	12302099	47,88	98,32	60,13	75,49	78,49
7/135		35-45	3,9x25 3,9x50	38	Ø8	-	12	2	12302012	47,88	98,32	60,13	75,49	78,49
8/135		35-45	3,9x25	38	-	-	12	2	12302100	47,88	98,32	60,13	75,49	78,49
7/135		35-45	3,9x25	38	-	-	12	2	12302097	47,88	98,32	60,13	75,49	78,49
8/135		35-45	3,9x50	38	Ø8	-	12	2	12302093	●	●	●	●	●
8/160		60-90	3,9x65 3,9x75 3,9x95	38	Ø8	-	12	2	12302101	●	●	●	●	●
8/135		35-45	3,9x25 3,9x50	38	Ø8	-	12	2	12302094	●	●	●	●	●
8/160		60-90	3,9x25 3,9x65 3,9x75 3,9x95	38	Ø8	-	12	2	12302102	●	●	●	●	●
7/135		35-45	3,9x25 3,9x50	38	Ø8	-	12	2	12302016	●	●	●	●	●
7/160		60-90	3,9x25 3,9x65 3,9x75 3,9x95	38	Ø8	-	12	2	12302103	●	●	●	●	●
8/135	90°	35-45	3,9x25 3,9x50	38	Ø8	-	12	2	12398007	●	●	●	●	●
8/160	90°	60-90	3,9x25 3,9x65 3,9x75 3,9x95	38	Ø8	-	12	2	12398011	●	●	●	●	●
7/135	90°	35-45	3,9x25 3,9x50	38	Ø8	-	12	2	12398008	●	●	●	●	●
7/160	90°	60-90	3,9x25 3,9x65 3,9x75 3,9x95	38	Ø8	-	12	2	12398012	●	●	●	●	●
8/135		35-65	3,9x25	38	-	-	12	2	12302095	●	●	●	●	●

Descrizione_Description **SALÒ**_ design Ufficio Tecnico Opentech

AISI304

Supporto_Support **ø52x10mm**

												NATURAL 304 19	PLATINUM ABACO® 62	BLACK RAL 9005 33	COPPER SATIN 1C	NATURAL GOLD SATIN 3C
	8/160	CLAC		60-90	3,9x25	38	-	-	24	1	12302104	●	●	●	●	●
	7/135	CLAC		35-65	3,9x25	38	-	-	24	1	12302092	●	●	●	●	●
	7/160	CLAC		60-90	3,9x25	38	-	-	24	1	12302105	●	●	●	●	●
	8/135	CLAC 90°		35-65	3,9x25	38	-	-	24	1	12398009	●	●	●	●	●
	8/160	CLAC 90°		60-90	3,9x25	38	-	-	24	1	12398013	●	●	●	●	●
	7/135	CLAC 90°		35-65	3,9x25	38	-	-	24	1	12398010	●	●	●	●	●
	7/160	CLAC 90°		60-90	3,9x25	38	-	-	24	1	12398014	●	●	●	●	●
	(8)/135			35-45	3,9x50	38	Ø8	-	24	1	05112122	●	●	●	●	●
	(8)/135			35-45	3,9x25 3,9x50	38	Ø8	-	24	1	05112110	●	●	●	●	●
	(7)/135			35-45	3,9x25 3,9x50	38	Ø8	-	24	1	05112111	●	●	●	●	●
	(6)/135			35-45	3,9x25 3,9x50	38	Ø8	-	24	1	05112112	●	●	●	●	●
	(5)/135			35-45	3,9x25 3,9x50	38	Ø8	-	24	1	05112254	●	●	●	●	●
	(4)/135			35-45	3,9x25 3,9x50	38	Ø8	-	24	1	05112113	●	●	●	●	●
	(8)/135			35-45	3,9x50	38	Ø8	-	24	1	05112137	●	●	●	●	●
	(8)/135			35-45	3,9x25 3,9x50	38	Ø8	-	24	1	05112125	●	●	●	●	●
	(7)/135			35-45	3,9x25 3,9x50	38	Ø8	-	24	1	05112126	●	●	●	●	●
	(6)/135			35-45	3,9x25 3,9x50	38	Ø8	-	24	1	05112127	●	●	●	●	●
	(5)/135			35-45	3,9x25 3,9x50	38	Ø8	-	24	1	05112265	●	●	●	●	●
	(4)/135			35-45	3,9x25 3,9x50	38	Ø8	-	24	1	05112128	●	●	●	●	●
	8/135	CLAC		35-45	3,9x25 3,9x50	38	Ø8	-	12	1	19402005	●	●	●	●	●
	7/135	CLAC		35-45	3,9x25 3,9x50	38	Ø8	-	12	1	19402006	●	●	●	●	●
	8/155	CLAC		50-55	3,9x25 3,9x70	38	Ø8	-	12	1	19402007	●	●	●	●	●
	7/155	CLAC		50-55	3,9x25 3,9x70	38	Ø8	-	12	1	19402008	●	●	●	●	●

Descrizione_Description **SALÒ**_ design Ufficio Tecnico Opentech

AISI304

Supporto_Support **ø52x10mm**

											NATURAL 304 19	PLATINUM ABACO® 62	BLACK RAL 9005 33	COPPER SATIN 1C	NATURAL GOLD SATIN 3C
	8/165	CLAC		60-75	3,9x25 3,9x65 3,9x75 3,9x95	38	Ø8	-	12	1	19402009	●	●	●	●	●
	7/165	CLAC		60-75	3,9x25 3,9x65 3,9x75 3,9x95	38	Ø8	-	12	1	19402010	●	●	●	●	●
	8/175	CLAC		75-90	3,9x25 3,9x65 3,9x75 3,9x95	38	Ø8	-	12	1	19402011	●	●	●	●	●
	7/175	CLAC		75-90	3,9x25 3,9x65 3,9x75 3,9x95	38	Ø8	-	12	1	19402012	●	●	●	●	●

Descrizione_Description **1/2 ferro ancora**_1/2 anchor spindle

STEEL

Supporto_Support -

											MECHANISM 26
	8/60	CLAC	-	-	-	-	-	-	10	8	06727462	●
	8/70	CLAC	-	-	-	-	-	-	10	8	06727427	●
	8/80	CLAC	-	-	-	-	-	-	10	8	06727428	●
	8/90	CLAC	-	-	-	-	-	-	10	8	06727429	●
	8/100	CLAC	-	-	-	-	-	-	10	8	06727463	●
	7/60	CLAC	-	-	-	-	-	-	10	8	06727432	●
	7/70	CLAC	-	-	-	-	-	-	10	8	06727433	●
	7/80	CLAC	-	-	-	-	-	-	10	8	06727434	●
	7/90	CLAC	-	-	-	-	-	-	10	8	06727435	●
	7/100	CLAC	-	-	-	-	-	-	10	8	06727436	●

Descrizione_Description **LOFT** pomolo fisso_fixed knob

ZAMAK for AISI304

Supporto_Support **ø52x10mm**

											PLATINUM 03	PLATINUM ABACO® 62	BLACK RAL 9005 33	COPPER SATIN 1C	NATURAL GOLD SATIN 3C
	7* or 8*	CLAC		-	3,9x25 3,9x50	38	Ø8	-	12	1	17002001	●	●	●	●	●

Descrizione_Description **ROUND** pomolo fisso_fixed knob

AISI304

Supporto_Support ø52x10mm

											NATURAL 304 19	PLATINUM ABACO® 62	BLACK RAL 9005 33	COPPER SATIN 1C	NATURAL GOLD SATIN 3C
○	7* or 8*	CLAC		-	3,9x25 3,9x50	38	Ø8	-	12	1	19802001	●	●	●	●	●

Descrizione_Description **1/2 ferro per pomolo fisso**_1/2 fixed knob spindle

STEEL

Supporto_Support -

											MECHANISM 26
7/90	CLAC	-	45-55	-	-	-	-	10	8	06727507	●
7/100	CLAC	-	50-65	-	-	-	-	10	8	06727508	●
7/110	CLAC	-	60-75	-	-	-	-	10	8	06727509	●
7/120	CLAC	-	70-85	-	-	-	-	10	8	06727510	●
7/130	CLAC	-	80-95	-	-	-	-	10	8	06727551	●
7/140	CLAC	-	90-105	-	-	-	-	10	8	06727552	●
8/90	CLAC	-	45-55	-	-	-	-	10	8	06727503	●
8/100	CLAC	-	50-65	-	-	-	-	10	8	06727504	●
8/110	CLAC	-	60-75	-	-	-	-	10	8	06727505	●
8/120	CLAC	-	70-85	-	-	-	-	10	8	06727506	●
8/130	CLAC	-	80-95	-	-	-	-	10	8	06727549	●
8/140	CLAC	-	90-105	-	-	-	-	10	8	06727550	●

SALÒ

design Ufficio Tecnico Opentech

CE

BRASS ZAMAK ALU AISI 316 **AISI 304**

MANIGLIA PER PORTE INTERNE – SUPPORTO ø45x8mm_INTERNAL DOORS HANDLE – SUPPORT ø45x8mm

CARATTERISTICHE_FEATURES					**FISSAGGIO**_FIXING						**FINITURE**_FINISHES							**OPZIONI**_OPTIONS			
	CLAC	R									P 1.500h	304 500h	316 500h	500h	500h	PVD 500h	500h		EN-179	REI-60	IP-65

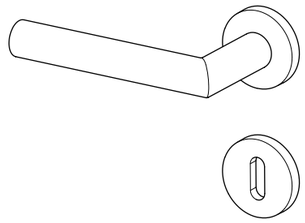

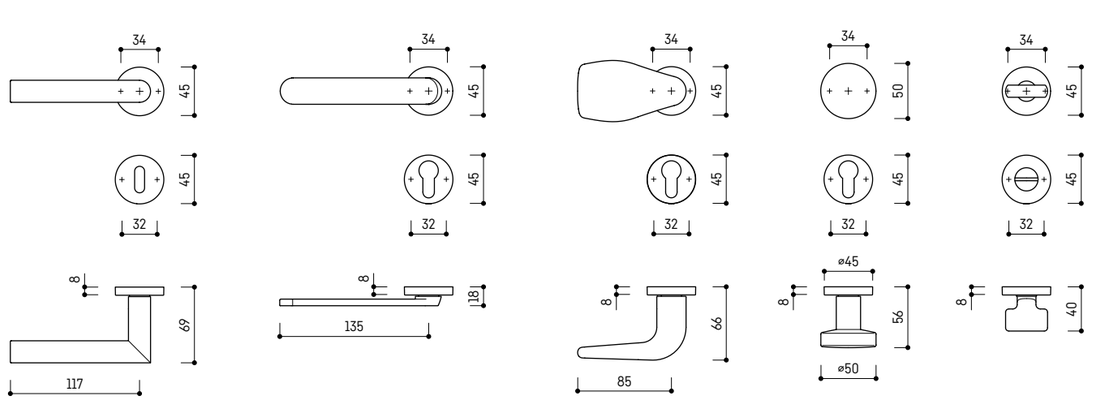

STANDARD REDUCED LOFT KNOB (FIXED) ROUND KNOB (FIXED) TOILET SET

VERSIONI DISPONIBILI_AVAILABLE VERSIONS

CAPITOLATO_SPECIFICATION

ULTRACYCLE®

ULTRACYCLE® tested for over **1.000.000** cycles - **CLASS 4**

NORMA DIN EN 1906_DIN EN 1906 NORM

4 | 7 | - | 0 | 0 | 4 | 0 | A

Per una descrizione dettagliata di tutte le specifiche tecniche presenti nel prodotto, da impiegare nei capitolati o nelle offerte pubbliche, fate riferimento alla sezione CAPITOLATI_for a detailed description of all the technical informations contained in the product, to be used in the specifications or in public tenders, please refer to the SPECIFICATIONS section.

Descrizione_Description **SALÒ**_ design Ufficio Tecnico Opentech

Supporto_Support AISI304

ø45X8mm

	■	+										NATURAL 304 19	PLATINUM ABACO® 62	BLACK RAL 9005 33	COPPER SATIN PVD 1C	NATURAL GOLD SATIN PVD 3C
	8*	CLIAC		-	3,9x25	34/32	-	-	12	2	12377001	●	●	●	●	●
	7*	CLIAC		-	3,9x25	34/32	-	-	12	2	12377002	●	●	●	●	●
	8/135	CLIAC		35-45	3,9x25	34	-	-	12	2	12377004	●	●	●	●	●
	7/135	CLIAC		35-45	3,9x25	34	-	-	12	2	12377003	●	●	●	●	●
	8/135	CLIAC		35-45	3,9x25	34/32	-	-	12	2	12377008	●	●	●	●	●
	7/135	CLIAC		35-45	3,9x25	34/32	-	-	12	2	12377007	●	●	●	●	●
	8/135	CLIAC		35-65	3,9x25	34/32	-	-	12	2	12377006	●	●	●	●	●
	7/135	CLIAC		35-65	3,9x25	34/32	-	-	12	2	12377005	●	●	●	●	●
	8/160	CLIAC		60-90	3,9x25	34/32	-	-	12	2	12377009	●	●	●	●	●
	7/160	CLIAC		60-90	3,9x25	34/32	-	-	12	2	12377010	●	●	●	●	●
	(8)/135	-		35-45	3,9x25	34/32	-	-	4	6	05112197	●	●	●	●	●
	(7)/135	-		35-45	3,9x25	34/32	-	-	4	6	05112198	●	●	●	●	●
	(6)/135	-		35-45	3,9x25	34/32	-	-	4	6	05112199	●	●	●	●	●
	(5)/135	-		35-45	3,9x25	34/32	-	-	4	6	05112257	●	●	●	●	●
	(4)/135	-		35-45	3,9x25	34/32	-	-	4	6	05112200	●	●	●	●	●
	8/135	CLIAC		35-45	3,9x25	34	-	-	12	1	19477001	●	●	●	●	●
	7/135	CLIAC		35-45	3,9x25	34	-	-	12	1	19477002	●	●	●	●	●
	8/155	CLIAC		50-55	3,9x25	34	-	-	12	1	19477003	●	●	●	●	●
	7/155	CLIAC		50-55	3,9x25	34	-	-	12	1	19477004	●	●	●	●	●
	8/165	CLIAC		60-75	3,9x25	34	-	-	12	1	19477005	●	●	●	●	●
	7/165	CLIAC		60-75	3,9x25	34	-	-	12	1	19477006	●	●	●	●	●
	8/175	CLIAC		75-90	3,9x25	34	-	-	12	1	19477007	●	●	●	●	●
	7/175	CLIAC		75-90	3,9x25	34	-	-	12	1	19477008	●	●	●	●	●

Descrizione_Description **1/2 ferro ancora**_1/2 anchor spindle

Supporto_Support STEEL

-

	■	+										MECHANISM 26
	8/60	CLIAC	-	-	-	-	-	-	10	8	06727462	●
	8/70	CLIAC	-	-	-	-	-	-	10	8	06727427	●
	8/80	CLIAC	-	-	-	-	-	-	10	8	06727428	●
	8/90	CLIAC	-	-	-	-	-	-	10	8	06727429	●
	8/100	CLIAC	-	-	-	-	-	-	10	8	06727463	●
	7/60	CLIAC	-	-	-	-	-	-	10	8	06727432	●
	7/70	CLIAC	-	-	-	-	-	-	10	8	06727433	●
	7/80	CLIAC	-	-	-	-	-	-	10	8	06727434	●
	7/90	CLIAC	-	-	-	-	-	-	10	8	06727435	●
	7/100	CLIAC	-	-	-	-	-	-	10	8	06727436	●

Descrizione_Description **LOFT** pomolo fisso_fixed knob

Supporto_Support **ZAMAK for AISI304**

ø45x8mm

	■	+										PLATINUM PVD 03	PLATINUM ABACO® 62	BLACK RAL 9005 33	COPPER SATIN PVD 1C	NATURAL GOLD SATIN PVD 3C
	7* or 8*	CLIAC		-	3,9x25	34	-	-	12	1	17077001	●	●	●	●	●

Descrizione_Description **ROUND** pomolo fisso_fixed knob

Supporto_Support **AISI304**

ø45x8mm

	■	+										NATURAL 304 19	PLATINUM ABACO® 62	BLACK RAL 9005 33	COPPER SATIN PVD 1C	NATURAL GOLD SATIN PVD 3C
	7* or 8*	CLIAC		-	3,9x25	34	-	-	12	1	19877001	●	●	●	●	●

Descrizione_Description | **1/2 ferro per pomolo fisso**_1/2 fixed knob spindle

Supporto_Support | STEEL

											MECHANISM 26
7/90	CLAQ	-	45-55	-	-	-	-	10	8	06727507	●
7/100	CLAQ	-	50-65	-	-	-	-	10	8	06727508	●
7/110	CLAQ	-	60-75	-	-	-	-	10	8	06727509	●
7/120	CLAQ	-	70-85	-	-	-	-	10	8	06727510	●
7/130	CLAQ	-	80-95	-	-	-	-	10	8	06727551	●
7/140	CLAQ	-	90-105	-	-	-	-	10	8	06727552	●
8/90	CLAQ	-	45-55	-	-	-	-	10	8	06727503	●
8/100	CLAQ	-	50-65	-	-	-	-	10	8	06727504	●
8/110	CLAQ	-	60-75	-	-	-	-	10	8	06727505	●
8/120	CLAQ	-	70-85	-	-	-	-	10	8	06727506	●
8/130	CLAQ	-	80-95	-	-	-	-	10	8	06727549	●
8/140	CLAQ	-	90-105	-	-	-	-	10	8	06727550	●

SALÒ

design Ufficio Tecnico Opentech

BRASS | ZAMAK | ALU | AISI 316 | **AISI 304**

MANIGLIA PER PORTE INTERNE – SUPPORTO EASYPIN ø55x2mm_INTERNAL DOORS HANDLE – SUPPORT EASYPIN ø55x2mm

CARATTERISTICHE_FEATURES	FISSAGGIO_FIXING	FINITURE_FINISHES								OPZIONI_OPTIONS			
		1.500h	500h	500h	500h	500h	500h	500h					
		P	304	316			PVD			EN-179	REI-60	IP-45

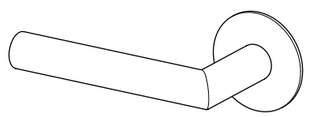

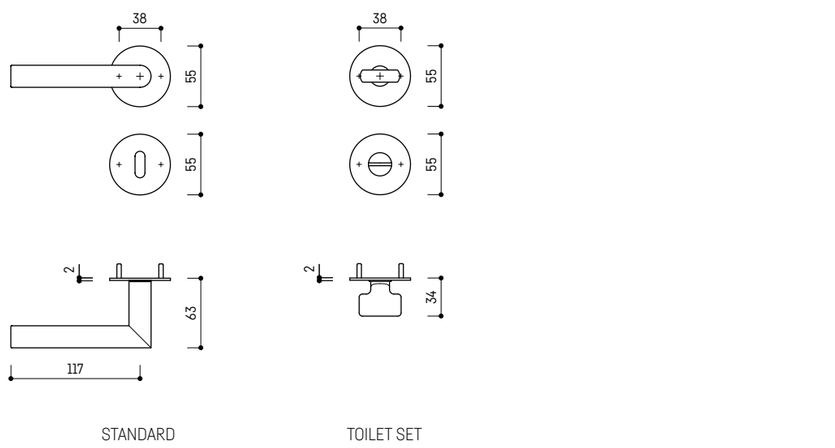

STANDARD | TOILET SET

VERSIONI DISPONIBILI_AVAILABLE VERSIONS

CAPITOLATO_SPECIFICATION

ULTRACYCLE®

ULTRACYCLE® tested for over **1.000.000** cycles - **CLASS 4**

NORMA DIN EN 1906_DIN EN 1906 NORM

4 | 7 | - | 0 | 0 | 4 | 0 | A

Per una descrizione dettagliata di tutte le specifiche tecniche presenti nel prodotto, da impiegare nei capitolati o nelle offerte pubbliche, fate riferimento alla sezione CAPITOLATI_for a detailed description of all the technical informations contained in the product, to be used in the specifications or in public tenders, please refer to the SPECIFICATIONS section.

Descrizione_Description | **SALÒ**_design Ufficio Tecnico Opentech

Supporto_Support | **EASYPIN ø55x2mm**

AISI304

■	+										NATURAL 304 19	PLATINUM ABACO® 62	BLACK RAL 9005 33	COPPER SATIN 1C	NATURAL GOLD SATIN 3C
8/135	CLAQ		35-45	-	38	Ø7	-	12	2	12359021	●	●	●	●	●
7/135	CLAQ		35-45	-	38	Ø7	-	12	2	12359001	●	●	●	●	●
-	CLAQ		-	-	38	Ø7	-	24	10	06548077	●	●	●	●	●
-	-		-	-	38	Ø7	-	24	10	06525121	●	●	●	●	●
-	-		-	-	38	Ø7	-	24	10	06525120	●	●	●	●	●
(8)/135	-		35-45	-	38	Ø7	-	4	6	05112251	●	●	●	●	●
(7)/135	-		35-45	-	38	Ø7	-	4	6	05112261	●	●	●	●	●
(6)/135	-		35-45	-	38	Ø7	-	4	6	05112262	●	●	●	●	●
(5)/135	-		35-45	-	38	Ø7	-	4	6	05112263	●	●	●	●	●
(4)/135	-		35-45	-	38	Ø7	-	4	6	05112264	●	●	●	●	●

TORRI

design Ufficio Tecnico Opentech

CE

BRASS | ZAMAK | ALU | AISI 316 | **AISI 304**

MANIGLIA PER PORTE INTERNE – SUPPORTO ø52x10mm_INTERNAL DOORS HANDLE – SUPPORT ø52x10mm

CARATTERISTICHE_FEATURES					FISSAGGIO_FIXING						FINITURE_FINISHES							OPZIONI_OPTIONS			
	CLAQ										P 1.500h	304 500h	316 500h	500h	500h	PVD 500h	500h		EN-179	REI-60	IP-65

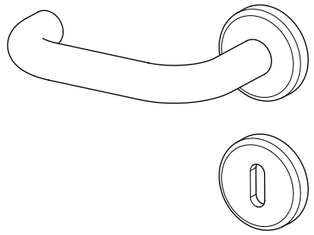

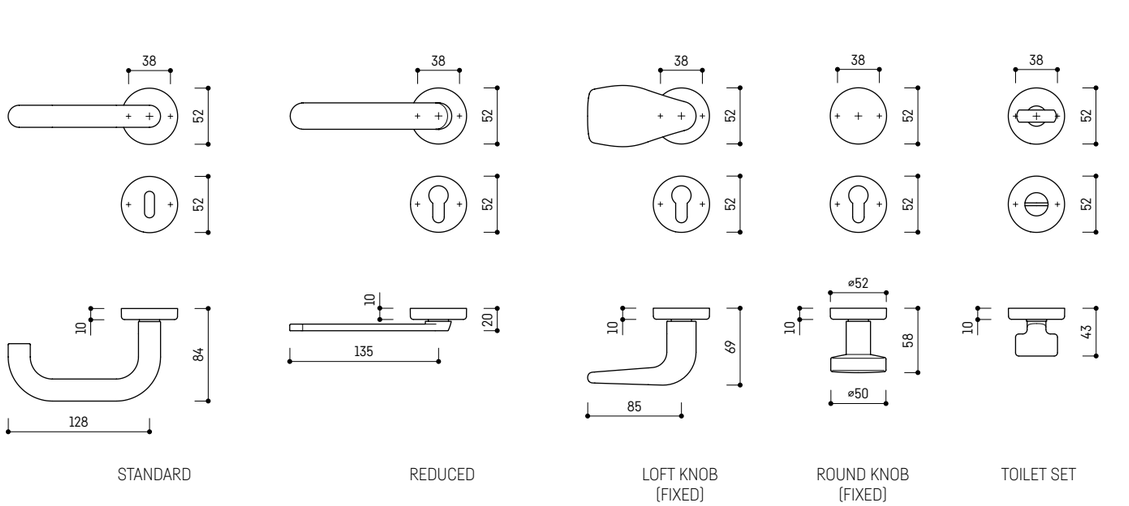

STANDARD | REDUCED | LOFT KNOB (FIXED) | ROUND KNOB (FIXED) | TOILET SET

VERSIONI DISPONIBILI_AVAILABLE VERSIONS

CAPITOLATO_SPECIFICATION

ULTRACYCLE®

ULTRACYCLE® tested for over **1.000.000** cycles - **CLASS 4**

NORMA DIN EN 1906_DIN EN 1906 NORM

4 | 7 | - | 0 | 0 | 4 | 0 | A

Per una descrizione dettagliata di tutte le specifiche tecniche presenti nel prodotto, da impiegare nei capitolati o nelle offerte pubbliche, fate riferimento alla sezione CAPITOLATI_for a detailed description of all the technical informations contained in the product, to be used in the specifications or in public tenders, please refer to the SPECIFICATIONS section.

Descrizione_Description TORRI_ design Ufficio Tecnico Opentech

AISI304

Supporto_Support ø52x10mm

												NATURAL 304 19	PLATINUM ABACO® 62	BLACK RAL 9005 33	COPPER SATIN PVD 1C	NATURAL GOLD SATIN PVD 3C
	8*	CLAC	-	3,9x25 3,9x50	38	Ø8	-	12	2	12402084	●	●	-	-	-
	7*	CLAC	-	3,9x25 3,9x50	38	Ø8	-	12	2	12402081	●	●	-	-	-
	8/135	CLAC	35-45	3,9x50	38	Ø8	-	12	2	12402088	●	●	-	-	-
	8/135	CLAC	35-45	3,9x25 3,9x50	38	Ø8	-	12	2	12402080	●	●	-	-	-
	7/135	CLAC	35-45	3,9x25 3,9x50	38	Ø8	-	12	2	12402101	●	●	-	-	-
	8/135	CLAC	35-65	3,9x25	38	Ø8	-	12	2	12402090	●	●	-	-	-
	7/135	CLAC	35-65	3,9x25	38	Ø8	-	12	2	12402004	●	●	-	-	-
	8/135	CLAC	35-45	3,9x50	38	Ø8	-	12	2	12402014	●	●	-	-	-
	8/135	CLAC	35-45	3,9x25 3,9x50	38	Ø8	-	12	2	12402100	●	●	-	-	-
	7/135	CLAC	35-45	3,9x25 3,9x50	38	Ø8	-	12	2	12402012	●	●	-	-	-
	8/135	CLAC	35-45	3,9x25	38	-	-	12	2	12402105	●	●	-	-	-
	7/135	CLAC	35-45	3,9x25	38	-	-	12	2	12402097	●	●	-	-	-
	8/135	CLAC	35-45	3,9x50	38	Ø8	-	12	2	12402102	●	●	-	-	-
	8/160	CLAC	60-90	3,9x65 3,9x75 3,9x95	38	Ø8	-	12	2	12402106	●	●	-	-	-
	8/135	CLAC	35-45	3,9x25 3,9x50	38	Ø8	-	12	2	12402089	●	●	-	-	-
	8/160	CLAC	60-90	3,9x25 3,9x65 3,9x75 3,9x95	38	Ø8	-	12	2	12402107	●	●	-	-	-
	7/135	CLAC	35-45	3,9x25 3,9x50	38	Ø8	-	12	2	12402016	●	●	-	-	-
	7/160	CLAC	60-90	3,9x25 3,9x65 3,9x75 3,9x95	38	Ø8	-	12	2	12402108	●	●	-	-	-
	8/135	CLAC 90°	35-45	3,9x25 3,9x50	38	Ø8	-	12	2	12498007	●	●	-	-	-
	8/160	CLAC 90°	60-90	3,9x25 3,9x65 3,9x75 3,9x95	38	Ø8	-	12	2	12498011	●	●	-	-	-
	7/135	CLAC 90°	35-45	3,9x25 3,9x50	38	Ø8	-	12	2	12498008	●	●	-	-	-
	7/160	CLAC 90°	60-90	3,9x25 3,9x65 3,9x75 3,9x95	38	Ø8	-	12	2	12498012	●	●	-	-	-
	8/135	CLAC	35-65	3,9x25	38	-	-	12	2	12402103	●	●	-	-	-

Descrizione_Description TORRI_ design Ufficio Tecnico Opentech

AISI304

Supporto_Support ø52x10mm

													NATURAL 304 19	PLATINUM ABACO® 62	BLACK RAL 9005 33	COPPER SATIN PVD 1C	NATURAL GOLD SATIN PVD 3C
	8/160	CLAC	60-90	3,9x25	38	-	-	24	1	12402109	●	●	-	-	-
	7/135	CLAC	35-65	3,9x25	38	-	-	24	1	12402104	●	●	-	-	-
	7/160	CLAC	60-90	3,9x25	38	-	-	24	1	12402110	●	●	-	-	-
	8/135	CLAC 90°	35-65	3,9x25	38	-	-	24	1	12498009	●	●	-	-	-
	8/160	CLAC 90°	60-90	3,9x25	38	-	-	24	1	12498013	●	●	-	-	-
	7/135	CLAC 90°	35-65	3,9x25	38	-	-	24	1	12498010	●	●	-	-	-
	7/160	CLAC 90°	60-90	3,9x25	38	-	-	24	1	12498014	●	●	-	-	-
	(8)/135		35-45	3,9x50	38	Ø8	-	24	1	05112122	●	●	-	-	-
	(8)/135		35-45	3,9x25 3,9x50	38	Ø8	-	24	1	05112110	●	●	-	-	-
	(7)/135		35-45	3,9x25 3,9x50	38	Ø8	-	24	1	05112111	●	●	-	-	-
	(6)/135		35-45	3,9x25 3,9x50	38	Ø8	-	24	1	05112112	●	●	-	-	-
	(5)/135		35-45	3,9x25 3,9x50	38	Ø8	-	24	1	05112254	●	●	-	-	-
	(4)/135		35-45	3,9x25 3,9x50	38	Ø8	-	24	1	05112113	●	●	-	-	-
	(8)/135		35-45	3,9x50	38	Ø8	-	24	1	05112137	●	●	-	-	-
	(8)/135		35-45	3,9x25 3,9x50	38	Ø8	-	24	1	05112125	●	●	-	-	-
	(7)/135		35-45	3,9x25 3,9x50	38	Ø8	-	24	1	05112126	●	●	-	-	-
	(6)/135		35-45	3,9x25 3,9x50	38	Ø8	-	24	1	05112127	●	●	-	-	-
	(5)/135		35-45	3,9x25 3,9x50	38	Ø8	-	24	1	05112265	●	●	-	-	-
	(4)/135		35-45	3,9x25 3,9x50	38	Ø8	-	24	1	05112128	●	●	-	-	-
	8/135	CLAC	35-45	3,9x25 3,9x50	38	Ø8	-	12	1	19402005	●	●	-	-	-
	7/135	CLAC	35-45	3,9x25 3,9x50	38	Ø8	-	12	1	19402006	●	●	-	-	-
	8/155	CLAC	50-55	3,9x25 3,9x70	38	Ø8	-	12	1	19402007	●	●	-	-	-
	7/155	CLAC	50-55	3,9x25 3,9x70	38	Ø8	-	12	1	19402008	●	●	-	-	-

Descrizione_Description **TORRI**_ design Ufficio Tecnico Opentech

AISI304

Supporto_Support **ø52x10mm**

■	+			X	X						NATURAL 304 19	PLATINUM ABACO® 62	BLACK RAL 9005 33	COPPER SATIN PVD 1C	NATURAL GOLD SATIN PVD 3C
8/165	CLIAO		60-75	3,9x25 3,9x65 3,9x75 3,9x95	38	Ø8	-	12	1	19402009	●	●	-	-	-
7/165	CLIAO		60-75	3,9x25 3,9x65 3,9x75 3,9x95	38	Ø8	-	12	1	19402010	●	●	-	-	-
8/175	CLIAO		75-90	3,9x25 3,9x65 3,9x75 3,9x95	38	Ø8	-	12	1	19402011	●	●	-	-	-
7/175	CLIAO		75-90	3,9x25 3,9x65 3,9x75 3,9x95	38	Ø8	-	12	1	19402012	●	●	-	-	-

Descrizione_Description **1/2 ferro ancora**_1/2 anchor spindle

STEEL

Supporto_Support -

■	+			X							MECHANISM 26
8/60	CLIAO	-	-	-	-	-	-	10	8	06727462	●
8/70	CLIAO	-	-	-	-	-	-	10	8	06727427	●
8/80	CLIAO	-	-	-	-	-	-	10	8	06727428	●
8/90	CLIAO	-	-	-	-	-	-	10	8	06727429	●
8/100	CLIAO	-	-	-	-	-	-	10	8	06727463	●
7/60	CLIAO	-	-	-	-	-	-	10	8	06727432	●
7/70	CLIAO	-	-	-	-	-	-	10	8	06727433	●
7/80	CLIAO	-	-	-	-	-	-	10	8	06727434	●
7/90	CLIAO	-	-	-	-	-	-	10	8	06727435	●
7/100	CLIAO	-	-	-	-	-	-	10	8	06727436	●

Descrizione_Description **LOFT** pomolo fisso_fixed knob

ZAMAK for AISI304

Supporto_Support **ø52x10mm**

■	+			X							PLATINUM PVD 03	PLATINUM ABACO® 62	BLACK RAL 9005 33	COPPER SATIN PVD 1C	NATURAL GOLD SATIN PVD 3C
7° or 8°	CLIAO		-	3,9x25 3,9x50	38	Ø8	-	12	1	17002001	●	●	-	-	-

Descrizione_Description **ROUND** pomolo fisso_fixed knob

AISI304

Supporto_Support **ø52x10mm**

■	+			X	X						NATURAL 304 19	PLATINUM ABACO® 62	BLACK RAL 9005 33	COPPER SATIN PVD 1C	NATURAL GOLD SATIN PVD 3C
7° or 8°	CLIAO		-	3,9x25 3,9x50	38	Ø8	-	12	1	19802001	●	●	-	-	-

Descrizione_Description **1/2 ferro per pomolo fisso**_1/2 fixed knob spindle

STEEL

Supporto_Support -

■	+			X	X						MECHANISM 26
7/90	CLIAO	-	45-55	-	-	-	-	10	8	06727507	●
7/100	CLIAO	-	50-65	-	-	-	-	10	8	06727508	●
7/110	CLIAO	-	60-75	-	-	-	-	10	8	06727509	●
7/120	CLIAO	-	70-85	-	-	-	-	10	8	06727510	●
7/130	CLIAO	-	80-95	-	-	-	-	10	8	06727551	●
7/140	CLIAO	-	90-105	-	-	-	-	10	8	06727552	●
8/90	CLIAO	-	45-55	-	-	-	-	10	8	06727503	●
8/100	CLIAO	-	50-65	-	-	-	-	10	8	06727504	●
8/110	CLIAO	-	60-75	-	-	-	-	10	8	06727505	●
8/120	CLIAO	-	70-85	-	-	-	-	10	8	06727506	●
8/130	CLIAO	-	80-95	-	-	-	-	10	8	06727549	●
8/140	CLIAO	-	90-105	-	-	-	-	10	8	06727550	●

TORRI

design Ufficio Tecnico Opentech

BRASS · ZAMAK · ALU · AISI 316 · **AISI 304**

MANIGLIA PER PORTE INTERNE – SUPPORTO ø45x8mm INTERNAL DOORS HANDLE – SUPPORT ø45x8mm

CARATTERISTICHE FEATURES	**FISSAGGIO** FIXING	**FINITURE** FINISHES	**OPZIONI** OPTIONS
		P 1.500h · 304 500h · 316 500h · 500h · 500h · PVD 500h · 500h	EN-179 · REI-60 · IP-65

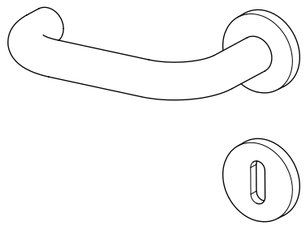

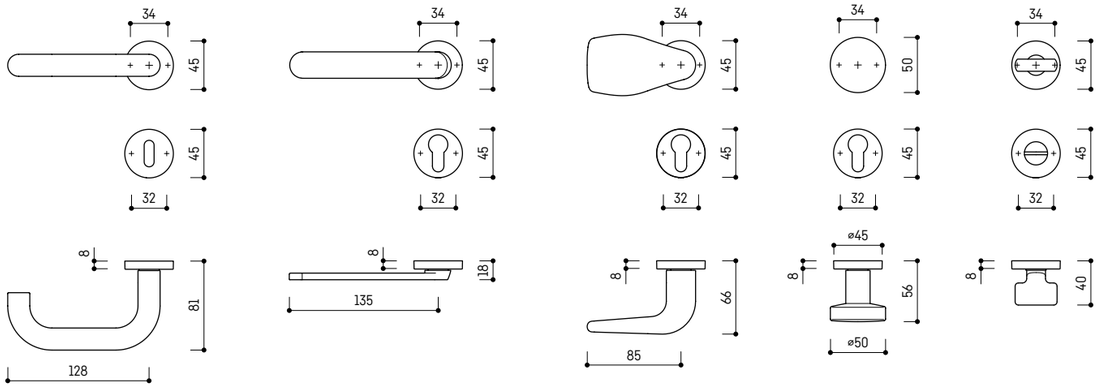

STANDARD · REDUCED · LOFT KNOB (FIXED) · ROUND KNOB (FIXED) · TOILET SET

VERSIONI DISPONIBILI AVAILABLE VERSIONS

CAPITOLATO SPECIFICATION

ULTRACYCLE®

ULTRACYCLE® tested for over **1.000.000** cycles - **CLASS 4**

NORMA DIN EN 1906 DIN EN 1906 NORM

4 | 7 | - | 0 | 0 | 4 | 0 | A

Per una descrizione dettagliata di tutte le specifiche tecniche presenti nel prodotto, da impiegare nei capitolati o nelle offerte pubbliche, fate riferimento alla sezione CAPITOLATI for a detailed description of all the technical informations contained in the product, to be used in the specifications or in public tenders, please refer to the SPECIFICATIONS section.

Descrizione Description: **TORRI** design Ufficio Tecnico Opentech

Supporto Support: **ø45X8mm**

AISI304

■	+	x	x	MATURAL 304 19	PLATINUM ABACO® 62	BLACK RAL 9005 33	COPPER SATIN PVD 1C	NATURAL GOLD SATIN PVD 3C
8*	GLAQ	3,9x25	34/32	-	-	12	2	12477008	●	●	-	-	-
7*	GLAQ	3,9x25	34/32	-	-	12	2	12477009	●	●	-	-	-
8/135	GLAQ	3,9x25	34	-	-	12	2	12477003	●	●	-	-	-
7/135	GLAQ	3,9x25	34	-	-	12	2	12477002	●	●	-	-	-
8/135	GLAQ	3,9x25	34/32	-	-	12	2	12477005	●	●	-	-	-
7/135	GLAQ	3,9x25	34/32	-	-	12	2	12477004	●	●	-	-	-
8/135	GLAQ	3,9x25	34/32	35-65	-	12	2	12477007	●	●	-	-	-
7/135	GLAQ	3,9x25	34/32	35-65	-	12	2	12477006	●	●	-	-	-
8/160	GLAQ	3,9x25	34/32	60-90	-	12	2	12477010	●	●	-	-	-
7/160	GLAQ	3,9x25	34/32	60-90	-	12	2	12477011	●	●	-	-	-
(8)/135	-	3,9x25	34/32	35-45	-	4	6	05112197	●	●	-	-	-
(7)/135	-	3,9x25	34/32	35-45	-	4	6	05112198	●	●	-	-	-
(6)/135	-	3,9x25	34/32	35-45	-	4	6	05112199	●	●	-	-	-
(5)/135	-	3,9x25	34/32	35-45	-	4	6	05112257	●	●	-	-	-
(4)/135	-	3,9x25	34/32	35-45	-	4	6	05112200	●	●	-	-	-
8/135	GLAQ	3,9x25	34	35-45	-	12	1	19477001	●	●	-	-	-
7/135	GLAQ	3,9x25	34	35-45	-	12	1	19477002	●	●	-	-	-
8/155	GLAQ	3,9x25	34	50-55	-	12	1	19477003	●	●	-	-	-
7/155	GLAQ	3,9x25	34	50-55	-	12	1	19477004	●	●	-	-	-
8/165	GLAQ	3,9x25	34	60-75	-	12	1	19477005	●	●	-	-	-
7/165	GLAQ	3,9x25	34	60-75	-	12	1	19477006	●	●	-	-	-
8/175	GLAQ	3,9x25	34	75-90	-	12	1	19477007	●	●	-	-	-
7/175	GLAQ	3,9x25	34	75-90	-	12	1	19477008	●	●	-	-	-

Descrizione_Description **1/2 ferro ancora**_1/2 anchor spindle

STEEL

Supporto_Support -

											MECHANISM 26
8/60	CLAC	-	-	-	-	-	-	10	8	06727462	●
8/70	CLAC	-	-	-	-	-	-	10	8	06727427	●
8/80	CLAC	-	-	-	-	-	-	10	8	06727428	●
8/90	CLAC	-	-	-	-	-	-	10	8	06727429	●
8/100	CLAC	-	-	-	-	-	-	10	8	06727463	●
7/60	CLAC	-	-	-	-	-	-	10	8	06727432	●
7/70	CLAC	-	-	-	-	-	-	10	8	06727433	●
7/80	CLAC	-	-	-	-	-	-	10	8	06727434	●
7/90	CLAC	-	-	-	-	-	-	10	8	06727435	●
7/100	CLAC	-	-	-	-	-	-	10	8	06727436	●

Descrizione_Description **LOFT** pomolo fisso_fixed knob

ZAMAK for AISI304

Supporto_Support **ø45x8mm**

												PLATINUM PVD 03	PLATINUM ABACO® 62	BLACK RAL 9005 33	COPPER SATIN PVD 1C	NATURAL GOLD SATIN PVD 3C
7* or 8*	CLAC	-	-	3,9x25	34	-	-	12	1	17077001	●	●	-	-	-

Descrizione_Description **ROUND** pomolo fisso_fixed knob

AISI304

Supporto_Support **ø45x8mm**

											NATURAL 304 19	PLATINUM ABACO® 62	BLACK RAL 9005 33	COPPER SATIN PVD 1C	NATURAL GOLD SATIN PVD 3C
7* or 8*	CLAC	-	-	3,9x25	34	-	-	12	1	19877001	●	●	-	-	-

Descrizione_Description **1/2 ferro per pomolo fisso**_1/2 fixed knob spindle

STEEL

Supporto_Support -

											MECHANISM 26
7/90	CLAC	-	45-55	-	-	-	-	10	8	06727507	●
7/100	CLAC	-	50-65	-	-	-	-	10	8	06727508	●
7/110	CLAC	-	60-75	-	-	-	-	10	8	06727509	●
7/120	CLAC	-	70-85	-	-	-	-	10	8	06727510	●
7/130	CLAC	-	80-95	-	-	-	-	10	8	06727551	●
7/140	CLAC	-	90-105	-	-	-	-	10	8	06727552	●
8/90	CLAC	-	45-55	-	-	-	-	10	8	06727503	●
8/100	CLAC	-	50-65	-	-	-	-	10	8	06727504	●
8/110	CLAC	-	60-75	-	-	-	-	10	8	06727505	●
8/120	CLAC	-	70-85	-	-	-	-	10	8	06727506	●
8/130	CLAC	-	80-95	-	-	-	-	10	8	06727549	●
8/140	CLAC	-	90-105	-	-	-	-	10	8	06727550	●

TORRI

design Ufficio Tecnico Opentech

BRASS ZAMAK ALU AISI 316 **AISI 304**

MANIGLIA PER PORTE INTERNE – SUPPORTO EASYPIN ø55x2mm_INTERNAL DOORS HANDLE – SUPPORT EASYPIN ø55x2mm

CARATTERISTICHE_FEATURES	**FISSAGGIO**_FIXING	**FINITURE**_FINISHES	**OPZIONI**_OPTIONS

1.500h	500h	500h	500h	500h	500h	500h	EN-179	REI-60	IP-65

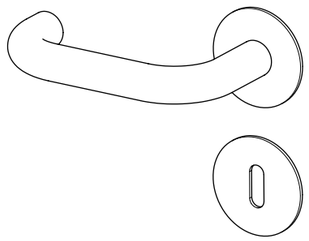

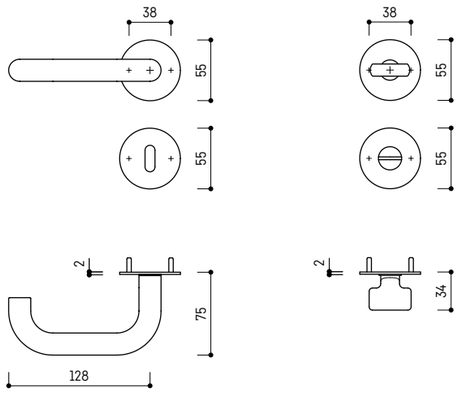

STANDARD TOILET SET

VERSIONI DISPONIBILI_AVAILABLE VERSIONS

CAPITOLATO_SPECIFICATION

ULTRACYCLE® tested for over **1.000.000** cycles - **CLASS 4**

NORMA DIN EN 1906_DIN EN 1906 NORM

4 | 7 | - | 0 | 0 | 4 | 0 | A

Per una descrizione dettagliata di tutte le specifiche tecniche presenti nel prodotto, da impiegare nei capitolati o nelle offerte pubbliche, fate riferimento alla sezione CAPITOLATI_for a detailed description of all the technical informations contained in the product, to be used in the specifications or in public tenders, please refer to the SPECIFICATIONS section.

Descrizione_Description **TORRI**_design Ufficio Tecnico Opentech

AISI304

Supporto_Support **EASYPIN ø55x2mm**

	■	+			X												

RIVA

design Ufficio Tecnico Opentech

BRASS · ZAMAK · ALU · AISI 316 · **AISI 304**

MANIGLIA PER PORTE INTERNE – SUPPORTO ø52x10mm_INTERNAL DOORS HANDLE – SUPPORT ø52x10mm

CARATTERISTICHE_FEATURES	**FISSAGGIO**_FIXING	**FINITURE**_FINISHES	**OPZIONI**_OPTIONS
CLAQ · R ·		1.500h · **304 500h** · 316 500h · **500h** · 500h · PVD 500h · 500h	**EN-179** · **REI-60** · **IP-65**

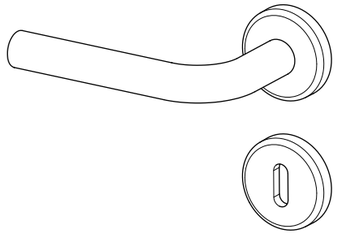

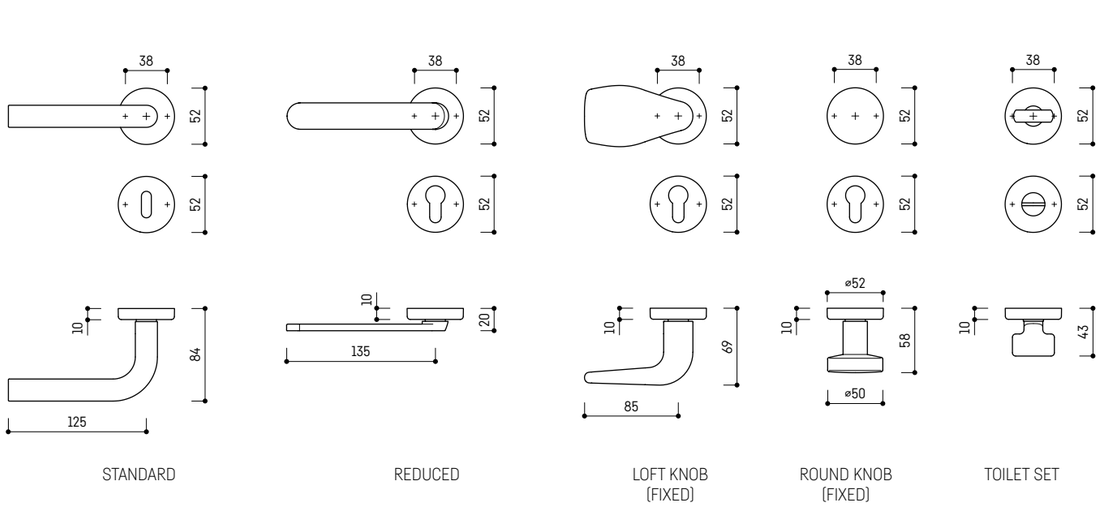

VERSIONI DISPONIBILI_AVAILABLE VERSIONS

CAPITOLATO_SPECIFICATION

ULTRACYCLE®

ULTRACYCLE® tested for over **1.000.000** cycles - **CLASS 4**

NORMA DIN EN 1906_DIN EN 1906 NORM

4 | 7 | - | 0 | 0 | 4 | 0 | A

Per una descrizione dettagliata di tutte le specifiche tecniche presenti nel prodotto, da impiegare nei capitolati o nelle offerte pubbliche, fate riferimento alla sezione CAPITOLATI_for a detailed description of all the technical informations contained in the product, to be used in the specifications or in public tenders, please refer to the SPECIFICATIONS section.

Descrizione_Description: **RIVA**_ design Ufficio Tecnico Opentech

AISI304

Supporto_Support: **ø52x10mm**

	■	+			X	x / x						19 MATURAL 304	62 PLATINUM ABLOD®	33 BLACK RAL 9005	1C COPPER SATIN	3C NATURAL GOLD SATIN
	8*	CLAQ		-	3,9x25 3,9x50	38	Ø8	-	12	2	12502080	●	-	●	-	-
	7*	CLAQ		-	3,9x25 3,9x50	38	Ø8	-	12	2	12502083	●	-	●	-	-
	8/135	CLAQ		35-45	3,9x50	38	Ø8	-	12	2	12502086	●	-	●	-	-
	8/135	CLAQ		35-45	3,9x25 3,9x50	38	Ø8	-	12	2	12502078	●	-	●	-	-
	7/135	CLAQ		35-45	3,9x25 3,9x50	38	Ø8	-	12	2	12502004	●	-	●	-	-
	8/135	CLAQ		35-65	3,9x25	38	Ø8	-	12	2	12502088	●	-	●	-	-
	7/135	CLAQ		35-65	3,9x25	38	Ø8	-	12	2	12502085	●	-	●	-	-
	8/135	CLAQ		35-45	3,9x50	38	Ø8	-	12	2	12502096	●	-	●	-	-
	8/135	CLAQ		35-45	3,9x25 3,9x50	38	Ø8	-	12	2	12502097	●	-	●	-	-
	7/135	CLAQ		35-45	3,9x25 3,9x50	38	Ø8	-	12	2	12502012	●	-	●	-	-
	8/135	CLAQ		35-45	3,9x25	38	-	-	12	2	12502098	●	-	●	-	-
	7/135	CLAQ		35-45	3,9x25	38	-	-	12	2	12502095	●	-	●	-	-
	8/135	CLAQ		35-45	3,9x50	38	Ø8	-	12	2	12502091	●	-	●	-	-
	8/160	CLAQ		60-90	3,9x65 3,9x75 3,9x95	38	Ø8	-	12	2	12502099	●	-	●	-	-
	8/135	CLAQ		35-45	3,9x25 3,9x50	38	Ø8	-	12	2	12502092	●	-	●	-	-
	8/160	CLAQ		60-90	3,9x25 3,9x65 3,9x75 3,9x95	38	Ø8	-	12	2	12502100	●	-	●	-	-
	7/135	CLAQ		35-45	3,9x25 3,9x50	38	Ø8	-	12	2	12502012	●	-	●	-	-
	7/160	CLAQ		60-90	3,9x25 3,9x65 3,9x75 3,9x95	38	Ø8	-	12	2	12502101	●	-	●	-	-
	8/135	CLAQ	90°	35-45	3,9x25 3,9x50	38	Ø8	-	12	2	12598007	●	-	●	-	-
	8/160	CLAQ	90°	60-90	3,9x25 3,9x65 3,9x75 3,9x95	38	Ø8	-	12	2	12598011	●	-	●	-	-
	7/135	CLAQ	90°	35-45	3,9x25 3,9x50	38	Ø8	-	12	2	12598008	●	-	●	-	-
	7/160	CLAQ	90°	60-90	3,9x25 3,9x65 3,9x75 3,9x95	38	Ø8	-	12	2	12598012	●	-	●	-	-
	8/135	CLAQ		35-65	3,9x25	38	-	-	12	2	12502093	●	-	●	-	-

Descrizione_Description RIVA_ design Ufficio Tecnico Opentech

AISI304

Supporto_Support ø52x10mm

■	+										NATURAL 304 19	PLATINUM ABACO® 62	BLACK RAL 9005 33	COPPER SATIN PVD 1C	NATURAL GOLD SATIN PVD 3C
8/160	CLAC 90°		60-90	3,9x25	38	-	-	24	1	12502102	●	-	●	-	-
7/135	CLAC		35-65	3,9x25	38	-	-	24	1	12502090	●	-	●	-	-
7/160	CLAC		60-90	3,9x25	38	-	-	24	1	12502103	●	-	●	-	-
8/135	CLAC 90°		35-65	3,9x25	38	-	-	24	1	12598009	●	-	●	-	-
8/160	CLAC 90°		60-90	3,9x25	38	-	-	24	1	12598013	●	-	●	-	-
7/135	CLAC 90°		35-65	3,9x25	38	-	-	24	1	12598010	●	-	●	-	-
7/160	CLAC 90°		60-90	3,9x25	38	-	-	24	1	12598014	●	-	●	-	-
(8)/135			35-45	3,9x50	38	Ø8	-	24	1	05112122	●	-	●	-	-
(8)/135			35-45	3,9x25 3,9x50	38	Ø8	-	24	1	05112110	●	-	●	-	-
(7)/135			35-45	3,9x25 3,9x50	38	Ø8	-	24	1	05112111	●	-	●	-	-
(6)/135			35-45	3,9x25 3,9x50	38	Ø8	-	24	1	05112112	●	-	●	-	-
(5)/135			35-45	3,9x25 3,9x50	38	Ø8	-	24	1	05112254	●	-	●	-	-
(4)/135			35-45	3,9x25 3,9x50	38	Ø8	-	24	1	05112113	●	-	●	-	-
(8)/135			35-45	3,9x50	38	Ø8	-	24	1	05112137	●	-	●	-	-
(8)/135			35-45	3,9x25 3,9x50	38	Ø8	-	24	1	05112125	●	-	●	-	-
(7)/135			35-45	3,9x25 3,9x50	38	Ø8	-	24	1	05112126	●	-	●	-	-
(6)/135			35-45	3,9x25 3,9x50	38	Ø8	-	24	1	05112127	●	-	●	-	-
(5)/135			35-45	3,9x25 3,9x50	38	Ø8	-	24	1	05112265	●	-	●	-	-
(4)/135			35-45	3,9x25 3,9x50	38	Ø8	-	24	1	05112128	●	-	●	-	-
8/135	CLAC		35-45	3,9x25 3,9x50	38	Ø8	-	12	1	19402005	●	-	●	-	-
7/135	CLAC		35-45	3,9x25 3,9x50	38	Ø8	-	12	1	19402006	●	-	●	-	-
8/155	CLAC		50-55	3,9x25 3,9x70	38	Ø8	-	12	1	19402007	●	-	●	-	-
7/155	CLAC		50-55	3,9x25 3,9x70	38	Ø8	-	12	1	19402008	●	-	●	-	-

Descrizione_Description RIVA_ design Ufficio Tecnico Opentech

AISI304

Supporto_Support ø52x10mm

■	+										NATURAL 304 19	PLATINUM ABACO® 62	BLACK RAL 9005 33	COPPER SATIN PVD 1C	NATURAL GOLD SATIN PVD 3C
8/165	CLAC		60-75	3,9x25 3,9x65 3,9x75 3,9x95	38	Ø8	-	12	1	19402009	●	-	●	-	-
7/165	CLAC		60-75	3,9x25 3,9x65 3,9x75 3,9x95	38	Ø8	-	12	1	19402010	●	-	●	-	-
8/175	CLAC		75-90	3,9x25 3,9x65 3,9x75 3,9x95	38	Ø8	-	12	1	19402011	●	-	●	-	-
7/175	CLAC		75-90	3,9x25 3,9x65 3,9x75 3,9x95	38	Ø8	-	12	1	19402012	●	-	●	-	-

Descrizione_Description **1/2 ferro ancora**_1/2 anchor spindle

STEEL

Supporto_Support -

■	+										MECHANISM 26
8/60	CLAC	-	-	-	-	-	-	10	8	06727462	●
8/70	CLAC	-	-	-	-	-	-	10	8	06727427	●
8/80	CLAC	-	-	-	-	-	-	10	8	06727428	●
8/90	CLAC	-	-	-	-	-	-	10	8	06727429	●
8/100	CLAC	-	-	-	-	-	-	10	8	06727463	●
7/60	CLAC	-	-	-	-	-	-	10	8	06727432	●
7/70	CLAC	-	-	-	-	-	-	10	8	06727433	●
7/80	CLAC	-	-	-	-	-	-	10	8	06727434	●
7/90	CLAC	-	-	-	-	-	-	10	8	06727435	●
7/100	CLAC	-	-	-	-	-	-	10	8	06727436	●

Descrizione_Description **LOFT** pomolo fisso_fixed knob

ZAMAK for AISI304

Supporto_Support ø52x10mm

■	+										PLATINUM PVD 03	PLATINUM ABACO® 62	BLACK RAL 9005 33	COPPER SATIN PVD 1C	NATURAL GOLD SATIN PVD 3C
7* or 8*	CLAC		-	3,9x25 3,9x50	38	Ø8	-	12	1	17002001	●	-	●	-	-

Descrizione_Description **ROUND** pomolo fisso_fixed knob

AISI304

Supporto_Support ø52x10mm

											NATURAL 304 19	PLATINUM ABACO® 62	BLACK RAL 9005 33	COPPER SATIN PVD 1C	NATURAL GOLD SATIN PVD 3C
○	7* or 8*	CLAQ		-	3,9x25 3,9x50	38	Ø8	-	12	1	19802001	●	-	●	-	-

Descrizione_Description **1/2 ferro per pomolo fisso**_1/2 fixed knob spindle

STEEL

Supporto_Support -

											MECHANISM 26
	7/90	CLAQ	-	45-55	-	-	-	-	10	8	06727507	●
	7/100	CLAQ	-	50-65	-	-	-	-	10	8	06727508	●
	7/110	CLAQ	-	60-75	-	-	-	-	10	8	06727509	●
	7/120	CLAQ	-	70-85	-	-	-	-	10	8	06727510	●
	7/130	CLAQ	-	80-95	-	-	-	-	10	8	06727551	●
	7/140	CLAQ	-	90-105	-	-	-	-	10	8	06727552	●
	8/90	CLAQ	-	45-55	-	-	-	-	10	8	06727503	●
	8/100	CLAQ	-	50-65	-	-	-	-	10	8	06727504	●
	8/110	CLAQ	-	60-75	-	-	-	-	10	8	06727505	●
	8/120	CLAQ	-	70-85	-	-	-	-	10	8	06727506	●
	8/130	CLAQ	-	80-95	-	-	-	-	10	8	06727549	●
	8/140	CLAQ	-	90-105	-	-	-	-	10	8	06727550	●

RIVA

design Ufficio Tecnico Opentech

CE

BRASS ZAMAK ALU AISI 316 **AISI 304**

MANIGLIA PER PORTE INTERNE – SUPPORTO ø45x8mm_INTERNAL DOORS HANDLE – SUPPORT ø45x8mm

CARATTERISTICHE_FEATURES					**FISSAGGIO**_FIXING						**FINITURE**_FINISHES							**OPZIONI**_OPTIONS			
	CLAQ										P	304	316			PVD					
											L500h	500h	500h	500h	500h	500h	500h		EN-179	REI-60	IP-65

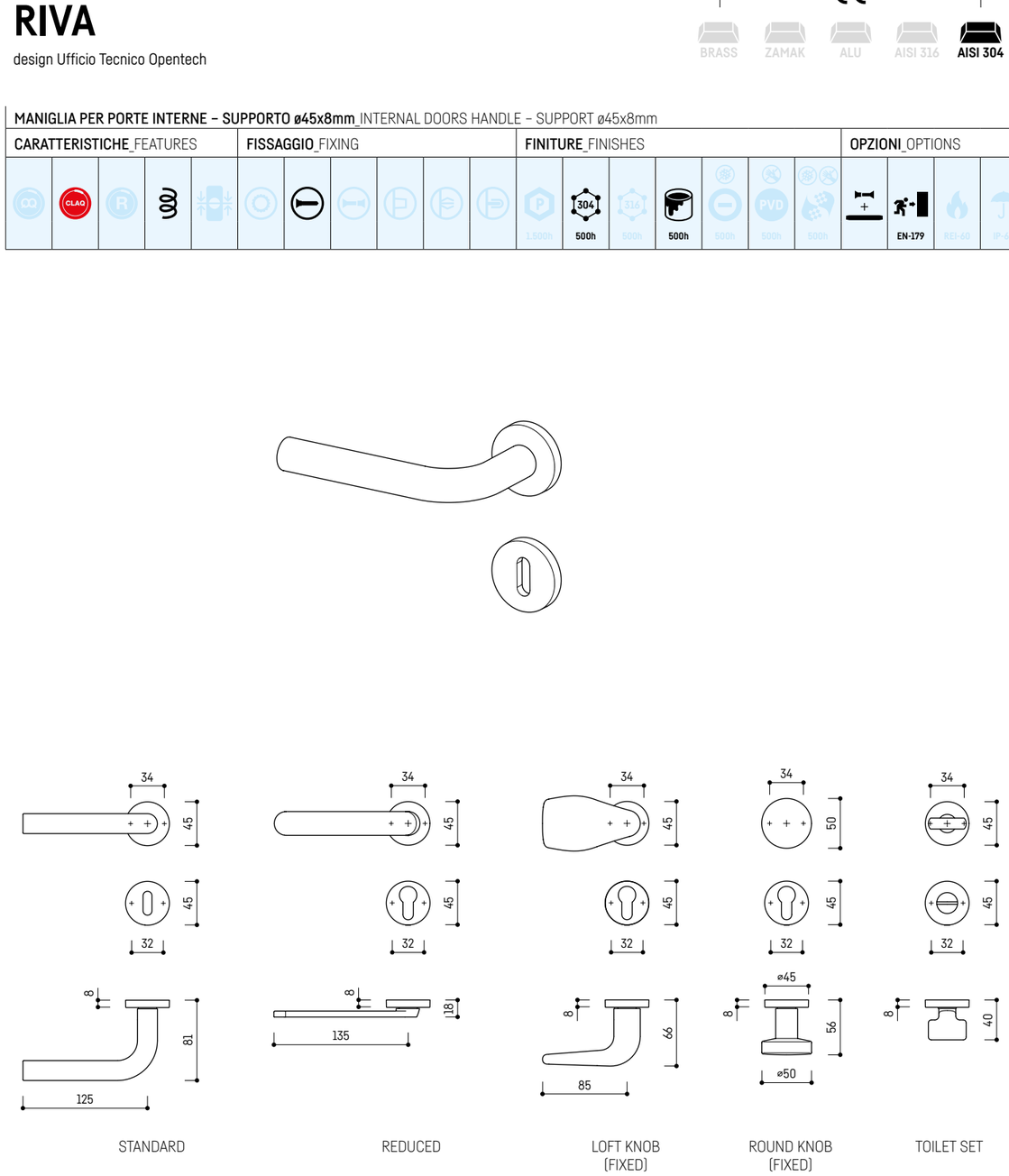

STANDARD REDUCED LOFT KNOB (FIXED) ROUND KNOB (FIXED) TOILET SET

VERSIONI DISPONIBILI_AVAILABLE VERSIONS

CAPITOLATO_SPECIFICATION

ULTRACYCLE®

ULTRACYCLE® tested for over **1.000.000** cycles - **CLASS 4**

NORMA DIN EN 1906_DIN EN 1906 NORM

4 | 7 | - | 0 | 0 | 4 | 0 | A

Per una descrizione dettagliata di tutte le specifiche tecniche presenti nel prodotto, da impiegare nei capitolati o nelle offerte pubbliche, fate riferimento alla sezione CAPITOLATI_for a detailed description of all the technical informations contained in the product, to be used in the specifications or in public tenders, please refer to the SPECIFICATIONS section.

Descrizione_Description **RIVA**_ design Ufficio Tecnico Opentech

AISI304

Supporto_Support **ø45X8mm**

													NATURAL 304 19	PLATINUM ABACO® 62	BLACK RAL 9005 33	COPPER SATIN 1C	NATURAL GOLD SATIN 3C
	8*	CLIAC		-	3,9x25	34/32	-	-	12	2	12577002	●	-	●	-	-
	7*	CLIAC		-	3,9x25	34/32	-	-	12	2	12577001	●	-	●	-	-
	8/135	CLIAC		35-45	3,9x25	34	-	-	12	2	12577004	●	-	●	-	-
	7/135	CLIAC		35-45	3,9x25	34	-	-	12	2	12577003	●	-	●	-	-
	8/135	CLIAC		35-45	3,9x25	34/32	-	-	12	2	12577006	●	-	●	-	-
	7/135	CLIAC		35-45	3,9x25	34/32	-	-	12	2	12577005	●	-	●	-	-
	8/135	CLIAC		35-65	3,9x25	34/32	-	-	12	2	12577008	●	-	●	-	-
	7/135	CLIAC		35-65	3,9x25	34/32	-	-	12	2	12577007	●	-	●	-	-
	8/160	CLIAC		60-90	3,9x25	34/32	-	-	12	2	12577009	●	-	●	-	-
	7/160	CLIAC		60-90	3,9x25	34/32	-	-	12	2	12577010	●	-	●	-	-
	(8)/135	-		35-45	3,9x25	34/32	-	-	4	6	05112197	●	-	●	-	-
	(7)/135	-		35-45	3,9x25	34/32	-	-	4	6	05112198	●	-	●	-	-
	(6)/135	-		35-45	3,9x25	34/32	-	-	4	6	05112199	●	-	●	-	-
	(5)/135	-		35-45	3,9x25	34/32	-	-	4	6	05112257	●	-	●	-	-
	(4)/135	-		35-45	3,9x25	34/32	-	-	4	6	05112200	●	-	●	-	-
	8/135	CLIAC		35-45	3,9x25	34	-	-	12	1	19477001	●	-	●	-	-
	7/135	CLIAC		35-45	3,9x25	34	-	-	12	1	19477002	●	-	●	-	-
	8/155	CLIAC		50-55	3,9x25	34	-	-	12	1	19477003	●	-	●	-	-
	7/155	CLIAC		50-55	3,9x25	34	-	-	12	1	19477004	●	-	●	-	-
	8/165	CLIAC		60-75	3,9x25	34	-	-	12	1	19477005	●	-	●	-	-
	7/165	CLIAC		60-75	3,9x25	34	-	-	12	1	19477006	●	-	●	-	-
	8/175	CLIAC		75-90	3,9x25	34	-	-	12	1	19477007	●	-	●	-	-
	7/175	CLIAC		75-90	3,9x25	34	-	-	12	1	19477008	●	-	●	-	-

Descrizione_Description **1/2 ferro ancora**_1/2 anchor spindle

STEEL

Supporto_Support -

												MECHANISM 26
	8/60	CLIAC	-	-	-	-	-	-	10	8	06727462	●
	8/70	CLIAC	-	-	-	-	-	-	10	8	06727427	●
	8/80	CLIAC	-	-	-	-	-	-	10	8	06727428	●
	8/90	CLIAC	-	-	-	-	-	-	10	8	06727429	●
	8/100	CLIAC	-	-	-	-	-	-	10	8	06727463	●
	7/60	CLIAC	-	-	-	-	-	-	10	8	06727432	●
	7/70	CLIAC	-	-	-	-	-	-	10	8	06727433	●
	7/80	CLIAC	-	-	-	-	-	-	10	8	06727434	●
	7/90	CLIAC	-	-	-	-	-	-	10	8	06727435	●
	7/100	CLIAC	-	-	-	-	-	-	10	8	06727436	●

Descrizione_Description **LOFT** pomolo fisso_fixed knob

ZAMAK for AISI304

Supporto_Support **ø45x8mm**

													PLATINUM 03	PLATINUM ABACO® 62	BLACK RAL 9005 33	COPPER SATIN 1C	NATURAL GOLD SATIN 3C
	7* or 8*	CLIAC		-	3,9x25	34	-	-	12	1	17077001	●	-	●	-	-

Descrizione_Description **ROUND** pomolo fisso_fixed knob

AISI304

Supporto_Support **ø45x8mm**

													NATURAL 304 19	PLATINUM ABACO® 62	BLACK RAL 9005 33	COPPER SATIN 1C	NATURAL GOLD SATIN 3C
	7* or 8*	CLIAC		-	3,9x25	34	-	-	12	1	19877001	●	-	●	-	-

Descrizione_Description | **1/2 ferro per pomolo fisso**_1/2 fixed knob spindle

Supporto_Support | STEEL

Supporto_Support | -

■	+										MECHANISM 26
7/90	CLAQ	-	45-55	-	-	-	-	10	8	06727507	●
7/100	CLAQ	-	50-65	-	-	-	-	10	8	06727508	●
7/110	CLAQ	-	60-75	-	-	-	-	10	8	06727509	●
7/120	CLAQ	-	70-85	-	-	-	-	10	8	06727510	●
7/130	CLAQ	-	80-95	-	-	-	-	10	8	06727551	●
7/140	CLAQ	-	90-105	-	-	-	-	10	8	06727552	●
8/90	CLAQ	-	45-55	-	-	-	-	10	8	06727503	●
8/100	CLAQ	-	50-65	-	-	-	-	10	8	06727504	●
8/110	CLAQ	-	60-75	-	-	-	-	10	8	06727505	●
8/120	CLAQ	-	70-85	-	-	-	-	10	8	06727506	●
8/130	CLAQ	-	80-95	-	-	-	-	10	8	06727549	●
8/140	CLAQ	-	90-105	-	-	-	-	10	8	06727550	●

RIVA

design Ufficio Tecnico Opentech

BRASS | ZAMAK | ALU | AISI 316 | **AISI 304**

MANIGLIA PER PORTE INTERNE – SUPPORTO EASYPIN ø55x2mm_INTERNAL DOORS HANDLE – SUPPORT EASYPIN ø55x2mm

CARATTERISTICHE_FEATURES	**FISSAGGIO**_FIXING	**FINITURE**_FINISHES	**OPZIONI**_OPTIONS
CLAQ, R		L500h, **304 500h**, 316 500h, **500h**, 500h, PVD 500h, 500h	**EN-179**, REI-60, IP-65

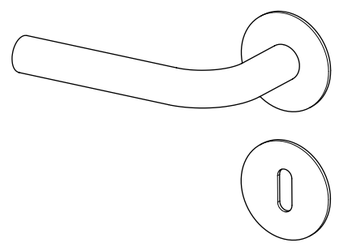

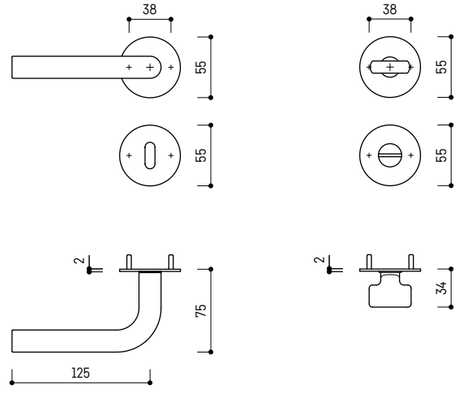

STANDARD TOILET SET

VERSIONI DISPONIBILI_AVAILABLE VERSIONS

CAPITOLATO_SPECIFICATION

ULTRACYCLE® tested for over **1.000.000** cycles - **CLASS 4**

NORMA DIN EN 1906_DIN EN 1906 NORM

4 | 7 | - | 0 | 0 | 4 | 0 | A

Per una descrizione dettagliata di tutte le specifiche tecniche presenti nel prodotto, da impiegare nei capitolati o nelle offerte pubbliche, fate riferimento alla sezione CAPITOLATI_for a detailed description of all the technical informations contained in the product, to be used in the specifications or in public tenders, please refer to the SPECIFICATIONS section.

Descrizione_Description | **RIVA**_design Ufficio Tecnico Opentech

AISI304

Supporto_Support | **EASYPIN ø55x2mm**

■	+										NATURAL 304 19	PLATINUM ABACO® 62	BLACK RAL 9005 33	COPPER SATIN 1C	NATURAL GOLD SATIN 3C
8/135	CLAQ		35-45	-	38	Ø7	-	12	2	12559021	●	-	●	-	-
7/135	CLAQ		35-45	-	38	Ø7	-	12	2	12559001	●	-	●	-	-
-	CLAQ		-	-	38	Ø7	-	24	10	06548077	●	-	●	-	-
-	-		-	-	38	Ø7	-	24	10	06525121	●	-	●	-	-
-	-		-	-	38	Ø7	-	24	10	06525120	●	-	●	-	-
(8)/135	-		35-45	-	38	Ø7	-	4	6	05112251	●	-	●	-	-
(7)/135	-		35-45	-	38	Ø7	-	4	6	05112261	●	-	●	-	-
(6)/135	-		35-45	-	38	Ø7	-	4	6	05112262	●	-	●	-	-
(5)/135	-		35-45	-	38	Ø7	-	4	6	05112263	●	-	●	-	-
(4)/135	-		35-45	-	38	Ø7	-	4	6	05112264	●	-	●	-	-

WING

design Ufficio Tecnico Opentech

CE

BRASS | ZAMAK | ALU | AISI 316 | **AISI 304**

MANIGLIA PER PORTE INTERNE – SUPPORTO ø52x10mm_INTERNAL DOORS HANDLE – SUPPORT ø52x10mm

CARATTERISTICHE_FEATURES	**FISSAGGIO**_FIXING	**FINITURE**_FINISHES								**OPZIONI**_OPTIONS			
		1.500h	500h	500h	500h	500h	500h	500h		EN-179	REI-60	IP-65

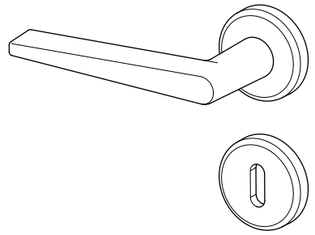

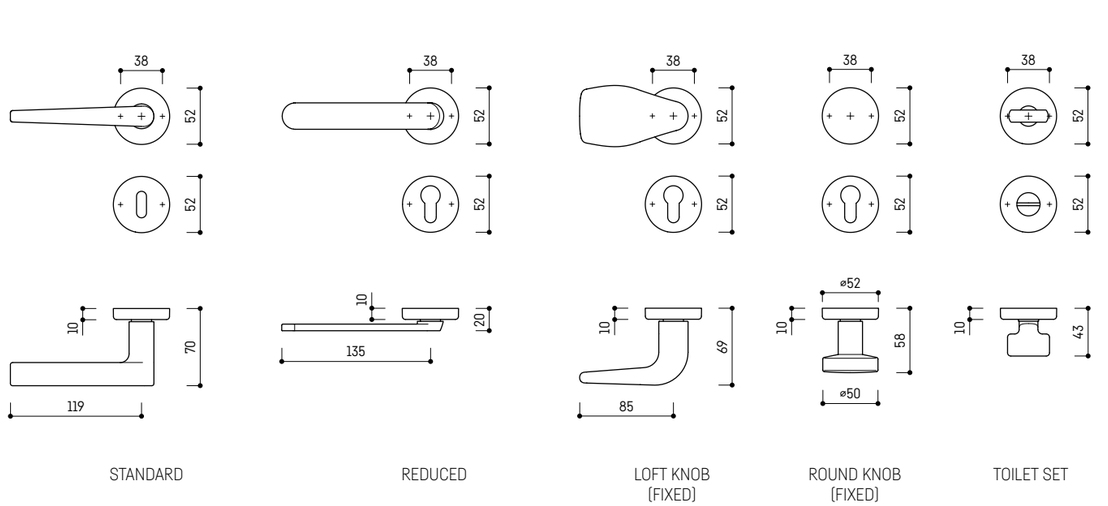

VERSIONI DISPONIBILI_AVAILABLE VERSIONS

CAPITOLATO_SPECIFICATION

ULTRACYCLE®

ULTRACYCLE® tested for over **1.000.000** cycles - **CLASS 4**

NORMA DIN EN 1906_DIN EN 1906 NORM

4 | 7 | - | 0 | 0 | 4 | 0 | A

Per una descrizione dettagliata di tutte le specifiche tecniche presenti nel prodotto, da impiegare nei capitolati o nelle offerte pubbliche, fate riferimento alla sezione CAPITOLATI_for a detailed description of all the technical informations contained in the product, to be used in the specifications or in public tenders, please refer to the SPECIFICATIONS section.

Descrizione_Description **WING**_ design Ufficio Tecnico Opentech

AISI304

Supporto_Support ø52x10mm

												NATURAL 304 19	PLATINUM ABACO® 62	BLACK RAL 9005 33	COPPER SATIN PVD 1C	NATURAL GOLD SATIN PVD 3C
	8*			-	3,9x25 3,9x50	38	Ø8	-	12	2	16502001	●	-	●	-	-
	7*			-	3,9x25 3,9x50	38	Ø8	-	12	2	16502002	●	-	●	-	-
	8/135			35-45	3,9x50	38	Ø8	-	12	2	16502003	●	-	●	-	-
	8/135			35-45	3,9x25 3,9x50	38	Ø8	-	12	2	16502004	●	-	●	-	-
	7/135			35-45	3,9x25 3,9x50	38	Ø8	-	12	2	16502005	●	-	●	-	-
	8/135			35-65	3,9x25	38	Ø8	-	12	2	16502006	●	-	●	-	-
	7/135			35-65	3,9x25	38	Ø8	-	12	2	16502007	●	-	●	-	-
	8/135			35-45	3,9x50	38	Ø8	-	12	2	16502009	●	-	●	-	-
	8/135			35-45	3,9x25 3,9x50	38	Ø8	-	12	2	16502012	●	-	●	-	-
	7/135			35-45	3,9x25 3,9x50	38	Ø8	-	12	2	16502013	●	-	●	-	-
	8/135			35-65	3,9x25	38	-	-	12	2	16502016	●	-	●	-	-
	7/135			35-65	3,9x25	38	-	-	12	2	16502017	●	-	●	-	-
	8/135			35-45	3,9x50	38	Ø8	-	12	2	16502008	●	-	●	-	-
	8/160			60-90	3,9x65 3,9x75 3,9x95	38	Ø8	-	12	2	16502018	●	-	●	-	-
	8/135			35-45	3,9x25 3,9x50	38	Ø8	-	12	2	16502010	●	-	●	-	-
	8/160			60-90	3,9x25 3,9x65 3,9x75 3,9x95	38	Ø8	-	12	2	16502019	●	-	●	-	-
	7/135			35-45	3,9x25 3,9x50	38	Ø8	-	12	2	16502011	●	-	●	-	-
	7/160			60-90	3,9x25 3,9x65 3,9x75 3,9x95	38	Ø8	-	12	2	16502020	●	-	●	-	-
	8/135	90°		35-45	3,9x25 3,9x50	38	Ø8	-	12	2	16598007	●	-	●	-	-
	8/160	90°		60-90	3,9x25 3,9x65 3,9x75 3,9x95	38	Ø8	-	12	2	16598011	●	-	●	-	-
	7/135	90°		35-45	3,9x25 3,9x50	38	Ø8	-	12	2	16598008	●	-	●	-	-
	7/160	90°		60-90	3,9x25 3,9x65 3,9x75 3,9x95	38	Ø8	-	12	2	16598012	●	-	●	-	-
	8/135			35-65	3,9x25	38	-	-	12	2	16502014	●	-	●	-	-

Descrizione_Description **WING**_ design Ufficio Tecnico Opentech

AISI304

Supporto_Support ø52x10mm

												NATURAL 304 19	PLATINUM ABACO® 62	BLACK RAL 9005 33	COPPER SATIN PVD 1C	NATURAL GOLD SATIN PVD 3C
	8/160			60-90	3,9x25	38	-	-	12	2	16502021	●	-	●	-	-
	7/135			35-65	3,9x25	38	-	-	12	2	16502015	●	-	●	-	-
	7/160			60-90	3,9x25	38	-	-	12	2	16502022	●	-	●	-	-
	8/135	90°		35-65	3,9x25	38	-	-	12	2	16598009	●	-	●	-	-
	8/160	90°		60-90	3,9x25	38	-	-	12	2	16598013	●	-	●	-	-
	7/135	90°		35-65	3,9x25	38	-	-	12	2	16598010	●	-	●	-	-
	7/160	90°		60-90	3,9x25	38	-	-	12	2	16598014	●	-	●	-	-
	(8)/135			35-45	3,9x50	38	Ø8	-	4	6	05112122	●	-	●	-	-
	(8)/135			35-45	3,9x25 3,9x50	38	Ø8	-	4	6	05112110	●	-	●	-	-
	(7)/135			35-45	3,9x25 3,9x50	38	Ø8	-	4	6	05112111	●	-	●	-	-
	(6)/135			35-45	3,9x25 3,9x50	38	Ø8	-	4	6	05112112	●	-	●	-	-
	(5)/135			35-45	3,9x25 3,9x50	38	Ø8	-	4	6	05112254	●	-	●	-	-
	(4)/135			35-45	3,9x25 3,9x50	38	Ø8	-	4	6	05112113	●	-	●	-	-
	(8)/135			35-45	3,9x50	38	Ø8	-	4	6	05112137	●	-	●	-	-
	(8)/135			35-45	3,9x25 3,9x50	38	Ø8	-	4	6	05112125	●	-	●	-	-
	(7)/135			35-45	3,9x25 3,9x50	38	Ø8	-	4	6	05112126	●	-	●	-	-
	(6)/135			35-45	3,9x25 3,9x50	38	Ø8	-	4	6	05112127	●	-	●	-	-
	(5)/135			35-45	3,9x25 3,9x50	38	Ø8	-	4	6	05112265	●	-	●	-	-
	(4)/135			35-45	3,9x25 3,9x50	38	Ø8	-	4	6	05112128	●	-	●	-	-
	8/135			35-45	3,9x25 3,9x50	38	Ø8	-	12	1	19402005	●	-	●	-	-
	7/135			35-45	3,9x25 3,9x50	38	Ø8	-	12	1	19402006	●	-	●	-	-
	8/155			50-55	3,9x25 3,9x70	38	Ø8	-	12	1	19402007	●	-	●	-	-
	7/155			50-55	3,9x25 3,9x70	38	Ø8	-	12	1	19402008	●	-	●	-	-

Descrizione_Description **WING**_ design Ufficio Tecnico Opentech

AISI304

Supporto_Support **ø52x10mm**

■	+			X							NATURAL 304 19	PLATINUM ABACO® 62	BLACK RAL 9005 33	COPPER SATIN PVD 1C	NATURAL GOLD SATIN PVD 3C
8/165	CLAC		60-75	3,9x25 3,9x65 3,9x75 3,9x95	38	Ø8	-	12	1	19402009	●	-	●	-	-
7/165	CLAC		60-75	3,9x25 3,9x65 3,9x75 3,9x95	38	Ø8	-	12	1	19402010	●	-	●	-	-
8/175	CLAC		75-90	3,9x25 3,9x65 3,9x75 3,9x95	38	Ø8	-	12	1	19402011	●	-	●	-	-
7/175	CLAC		75-90	3,9x25 3,9x65 3,9x75 3,9x95	38	Ø8	-	12	1	19402012	●	-	●	-	-

Descrizione_Description **1/2 ferro ancora**_1/2 anchor spindle

STEEL

Supporto_Support -

■	+			X							MECHANISM 26
8/60	CLAC	-	-	-	-	-	-	10	8	06727462	●
8/70	CLAC	-	-	-	-	-	-	10	8	06727427	●
8/80	CLAC	-	-	-	-	-	-	10	8	06727428	●
8/90	CLAC	-	-	-	-	-	-	10	8	06727429	●
8/100	CLAC	-	-	-	-	-	-	10	8	06727463	●
7/60	CLAC	-	-	-	-	-	-	10	8	06727432	●
7/70	CLAC	-	-	-	-	-	-	10	8	06727433	●
7/80	CLAC	-	-	-	-	-	-	10	8	06727434	●
7/90	CLAC	-	-	-	-	-	-	10	8	06727435	●
7/100	CLAC	-	-	-	-	-	-	10	8	06727436	●

Descrizione_Description **LOFT** pomolo fisso_fixed knob

ZAMAK for AISI304

Supporto_Support **ø52x10mm**

■	+			X							PLATINUM PVD 03	PLATINUM ABACO® 62	BLACK RAL 9005 33	COPPER SATIN PVD 1C	NATURAL GOLD SATIN PVD 3C
7* or 8*	CLAC		-	3,9x25 3,9x50	38	Ø8	-	12	1	17002001	●	-	●	-	-

Descrizione_Description **ROUND** pomolo fisso_fixed knob

AISI304

Supporto_Support **ø52x10mm**

■	+			X							NATURAL 304 19	PLATINUM ABACO® 62	BLACK RAL 9005 33	COPPER SATIN PVD 1C	NATURAL GOLD SATIN PVD 3C
7* or 8*	CLAC		-	3,9x25 3,9x50	38	Ø8	-	12	1	19802001	●	-	●	-	-

Descrizione_Description **1/2 ferro per pomolo fisso**_1/2 fixed knob spindle

STEEL

Supporto_Support -

■	+			X							MECHANISM 26
7/90	CLAC	-	45-55	-	-	-	-	10	8	06727507	●
7/100	CLAC	-	50-65	-	-	-	-	10	8	06727508	●
7/110	CLAC	-	60-75	-	-	-	-	10	8	06727509	●
7/120	CLAC	-	70-85	-	-	-	-	10	8	06727510	●
7/130	CLAC	-	80-95	-	-	-	-	10	8	06727551	●
7/140	CLAC	-	90-105	-	-	-	-	10	8	06727552	●
8/90	CLAC	-	45-55	-	-	-	-	10	8	06727503	●
8/100	CLAC	-	50-65	-	-	-	-	10	8	06727504	●
8/110	CLAC	-	60-75	-	-	-	-	10	8	06727505	●
8/120	CLAC	-	70-85	-	-	-	-	10	8	06727506	●
8/130	CLAC	-	80-95	-	-	-	-	10	8	06727549	●
8/140	CLAC	-	90-105	-	-	-	-	10	8	06727550	●

WING

design Ufficio Tecnico Opentech

BRASS ZAMAK ALU AISI 316 **AISI 304**

MANIGLIA PER PORTE INTERNE – SUPPORTO ø45x8mm_INTERNAL DOORS HANDLE – SUPPORT ø45x8mm

CARATTERISTICHE_FEATURES	FISSAGGIO_FIXING	FINITURE_FINISHES	OPZIONI_OPTIONS
CQ, CLAQ, R		P 1.500h, 304 500h, 316 500h, 500h, 500h, PVD 500h, 500h	EN-179, REI-60, IP-65

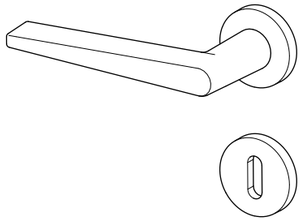

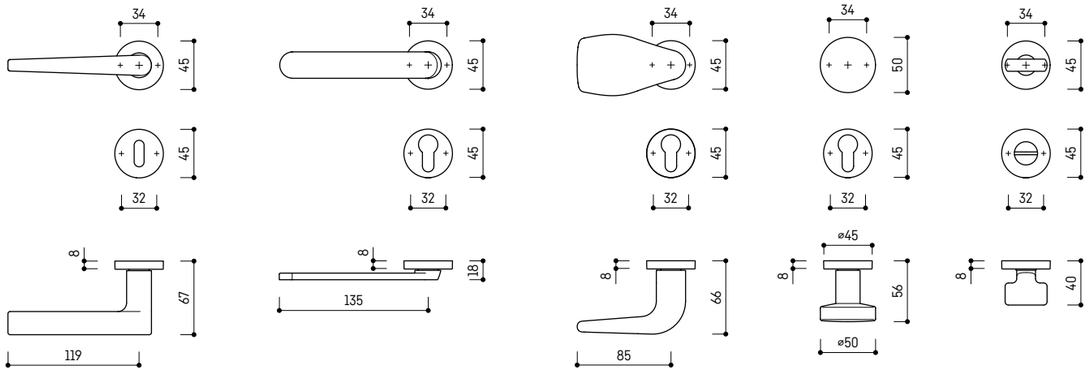

STANDARD | REDUCED | LOFT KNOB (FIXED) | ROUND KNOB (FIXED) | TOILET SET

VERSIONI DISPONIBILI_AVAILABLE VERSIONS

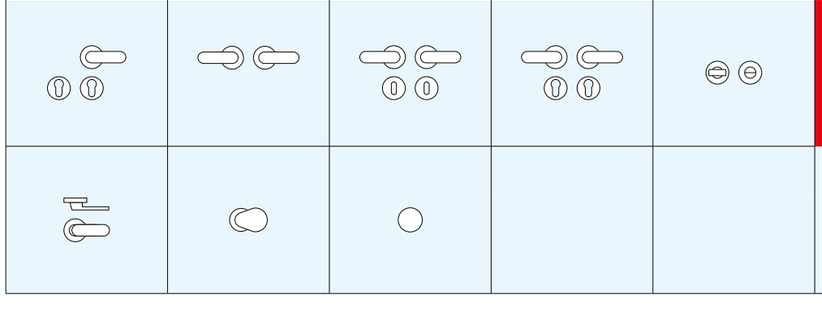

CAPITOLATO_SPECIFICATION

ULTRACYCLE®

ULTRACYCLE® tested for over **1.000.000** cycles - **CLASS 4**

NORMA DIN EN 1906_DIN EN 1906 NORM

4 | 7 | - | 0 | 0 | 4 | 0 | A

Per una descrizione dettagliata di tutte le specifiche tecniche presenti nel prodotto, da impiegare nei capitolati o nelle offerte pubbliche, fate riferimento alla sezione CAPITOLATI_for a detailed description of all the technical informations contained in the product, to be used in the specifications or in public tenders, please refer to the SPECIFICATIONS section.

Descrizione_Description: WING_ design Ufficio Tecnico Opentech

AISI304

Supporto_Support: ø45X8mm

												NATURAL 304 19	PLATINUM ABACO® 62	BLACK RAL 9005 33	COPPER SATIN PVD 1C	NATURAL GOLD SATIN PVD 3C
	8*	CLAQ		-	3,9x25	34/32	-	-	12	2	16577001	●	-	●	-	-
	7*	CLAQ		-	3,9x25	34/32	-	-	12	2	16577002	●	-	●	-	-
	8/135	CLAQ		35-45	3,9x25	34	-	-	12	2	16577003	●	-	●	-	-
	7/135	CLAQ		35-45	3,9x25	34	-	-	12	2	16577004	●	-	●	-	-
	8/135	CLAQ		35-45	3,9x25	34/32	-	-	12	2	16577007	●	-	●	-	-
	7/135	CLAQ		35-45	3,9x25	34/32	-	-	12	2	16577008	●	-	●	-	-
	8/135	CLAQ		35-65	3,9x25	34/32	-	-	12	2	16577005	●	-	●	-	-
	7/135	CLAQ		35-65	3,9x25	34/32	-	-	12	2	16577006	●	-	●	-	-
	8/160	CLAQ		60-90	3,9x25	34/32	-	-	12	2	16577009	●	-	●	-	-
	7/160	CLAQ		60-90	3,9x25	34/32	-	-	12	2	16577010	●	-	●	-	-
	(8)/135	-		35-45	3,9x25	34/32	-	-	4	6	05112197	●	-	●	-	-
	(7)/135	-		35-45	3,9x25	34/32	-	-	4	6	05112198	●	-	●	-	-
	(6)/135	-		35-45	3,9x25	34/32	-	-	4	6	05112198	●	-	●	-	-
	(5)/135	-		35-45	3,9x25	34/32	-	-	4	6	05112257	●	-	●	-	-
	(4)/135	-		35-45	3,9x25	34/32	-	-	4	6	05112200	●	-	●	-	-
	8/135	CLAQ		35-45	3,9x25	34	-	-	12	1	19477001	●	-	●	-	-
	7/135	CLAQ		35-45	3,9x25	34	-	-	12	1	19477002	●	-	●	-	-
	8/155	CLAQ		50-55	3,9x25	34	-	-	12	1	19477003	●	-	●	-	-
	7/155	CLAQ		50-55	3,9x25	34	-	-	12	1	19477004	●	-	●	-	-
	8/165	CLAQ		60-75	3,9x25	34	-	-	12	1	19477005	●	-	●	-	-
	7/165	CLAQ		60-75	3,9x25	34	-	-	12	1	19477006	●	-	●	-	-
	8/175	CLAQ		75-90	3,9x25	34	-	-	12	1	19477007	●	-	●	-	-
	7/175	CLAQ		75-90	3,9x25	34	-	-	12	1	19477008	●	-	●	-	-

Descrizione_Description **1/2 ferro ancora**_1/2 anchor spindle

STEEL

Supporto_Support -

											MECHANISM 26
8/60	CLAG	-	-	-	-	-	-	10	8	06727462	●
8/70	CLAG	-	-	-	-	-	-	10	8	06727427	●
8/80	CLAG	-	-	-	-	-	-	10	8	06727428	●
8/90	CLAG	-	-	-	-	-	-	10	8	06727429	●
8/100	CLAG	-	-	-	-	-	-	10	8	06727463	●
7/60	CLAG	-	-	-	-	-	-	10	8	06727432	●
7/70	CLAG	-	-	-	-	-	-	10	8	06727433	●
7/80	CLAG	-	-	-	-	-	-	10	8	06727434	●
7/90	CLAG	-	-	-	-	-	-	10	8	06727435	●
7/100	CLAG	-	-	-	-	-	-	10	8	06727436	●

Descrizione_Description **LOFT** pomolo fisso_fixed knob

ZAMAK for AISI304

Supporto_Support **ø45x8mm**

											PLATINUM PVD 03	PLATINUM ABACO® 62	BLACK RAL 9005 33	COPPER SATIN PVD 1C	NATURAL GOLD SATIN PVD 3C
7* or 8*	CLAG	-	-	3,9x25	34	-	-	12	1	17077001	●	-	●	-	-

Descrizione_Description **ROUND** pomolo fisso_fixed knob

AISI304

Supporto_Support **ø45x8mm**

											NATURAL 304 19	PLATINUM ABACO® 62	BLACK RAL 9005 33	COPPER SATIN PVD 1C	NATURAL GOLD SATIN PVD 3C
7* or 8*	CLAG	-	-	3,9x25	34	-	-	12	1	19877001	●	-	●	-	-

Descrizione_Description **1/2 ferro per pomolo fisso**_1/2 fixed knob spindle

STEEL

Supporto_Support -

											MECHANISM 26
7/90	CLAG	-	45-55	-	-	-	-	10	8	06727507	●
7/100	CLAG	-	50-65	-	-	-	-	10	8	06727508	●
7/110	CLAG	-	60-75	-	-	-	-	10	8	06727509	●
7/120	CLAG	-	70-85	-	-	-	-	10	8	06727510	●
7/130	CLAG	-	80-95	-	-	-	-	10	8	06727551	●
7/140	CLAG	-	90-105	-	-	-	-	10	8	06727552	●
8/90	CLAG	-	45-55	-	-	-	-	10	8	06727503	●
8/100	CLAG	-	50-65	-	-	-	-	10	8	06727504	●
8/110	CLAG	-	60-75	-	-	-	-	10	8	06727505	●
8/120	CLAG	-	70-85	-	-	-	-	10	8	06727506	●
8/130	CLAG	-	80-95	-	-	-	-	10	8	06727549	●
8/140	CLAG	-	90-105	-	-	-	-	10	8	06727550	●

WING

design Ufficio Tecnico Opentech

BRASS ZAMAK ALU AISI 316 **AISI 304**

MANIGLIA PER PORTE INTERNE – SUPPORTO EASYPIN ø55x2mm_INTERNAL DOORS HANDLE – SUPPORT EASYPIN ø55x2mm

CARATTERISTICHE_FEATURES	FISSAGGIO_FIXING	FINITURE_FINISHES	OPZIONI_OPTIONS
CQ, CLAQ, R		P 1.500h, 304 500h, 316 500h, 500h, 500h, PVD 500h, 500h	EN-179, REI-60, IP-65

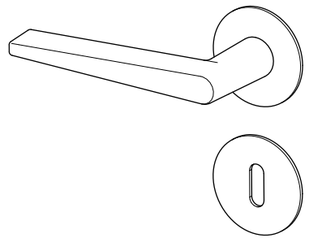

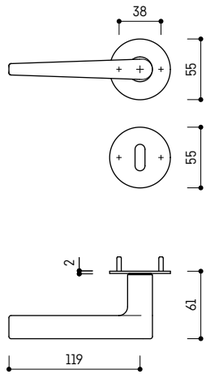

STANDARD

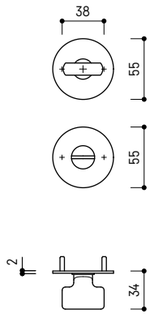

TOILET SET

VERSIONI DISPONIBILI_AVAILABLE VERSIONS

CAPITOLATO_SPECIFICATION

ULTRACYCLE®

ULTRACYCLE® tested for over **1.000.000** cycles - **CLASS 4**

NORMA DIN EN 1906_DIN EN 1906 NORM

4 | 7 | - | 0 | 0 | 4 | 0 | A

Per una descrizione dettagliata di tutte le specifiche tecniche presenti nel prodotto, da impiegare nei capitolati o nelle offerte pubbliche, fate riferimento alla sezione CAPITOLATI_for a detailed description of all the technical informations contained in the product, to be used in the specifications or in public tenders, please refer to the SPECIFICATIONS section.

Descrizione_Description: **WING**_design Ufficio Tecnico Opentech

Supporto_Support: **AISI304**

												NATURAL 304 19	PLATINUM ABACO® 62	BLACK RAL 9005 33	COPPER SATIN 1C	NATURAL GOLD SATIN 3C
	8/135	CLAQ		35-45	-	38	Ø7	-	12	2	16559001	●	-	●	-	-
	7/135	CLAQ		35-45	-	38	Ø7	-	12	2	16559002	●	-	●	-	-
	-	CLAQ		-	-	38	Ø7	-	24	10	06548077	●	-	●	-	-
	-	-		-	-	38	Ø7	-	24	10	06525121	●	-	●	-	-
	-	-		-	-	38	Ø7	-	24	10	06525120	●	-	●	-	-
	(8)/135	-		35-45	-	38	Ø7	-	4	6	05112251	●	-	●	-	-
	(7)/135	-		35-45	-	38	Ø7	-	4	6	05112261	●	-	●	-	-
	(6)/135	-		35-45	-	38	Ø7	-	4	6	05112262	●	-	●	-	-
	(5)/135	-		35-45	-	38	Ø7	-	4	6	05112263	●	-	●	-	-
	(4)/135	-		35-45	-	38	Ø7	-	4	6	05112264	●	-	●	-	-